GRADY-WHITE BOATS

P.O. Box 1527, Greenville, NC 27835-1527
Greenville Blvd. NE, Greenville, NC 27834
919/752-2111 FAX: 919/830-8475

Dear Grady-White Owner:

Welcome aboard!

Buying and owning a boat is a very special experience. Of all the many products you'll ever own we want your Grady-White experience to be the absolute best. That means providing the descriptions, explanations and technical support that you need to enjoy your Grady-White with confidence and security.

Your Grady-White exceeds all US Coast Guard safety standards and is built to standards certified by the National Marine Manufacturers Association (NMMA). Best of all, your boat is built to Grady-White standards, standards that have served our owners through some truly extraordinary conditions since our first models built in 1958.

The seaworthiness and safety of your Grady-White is highly dependent on the operation, maintenance and care of your boat, so please read this manual thoroughly and keep it around for reference. If you need further explanation or "hands-on" help don't hesitate to ask the people at your Grady-White dealership; they have experience with the systems and operations of your boat. If for any reason you need additional help, please feel free to call us at the factory. We sincerely want to provide you with the help and information that will make your Grady-White experience delightful.

Thanks for choosing a Grady-White. All of us at the factory and at your dealership are dedicated to earning your confidence in Grady-White Boats. Again, welcome aboard.

Sincerely yours,

GRADY-WHITE BOATS, INC.

Kris Sheppard

Kris Sheppard
President

CONSUMER INFORMATION

OWNER'S PACKET

Your Grady-White has many features and accessories that have existing printed material provided by the various equipment manufacturers. This information is compiled in a package that we will reference throughout this manual as an "Owner's Packet." This Owner's Packet includes a Grady-White Owner's Manual and Engine Manual(s) to advise on operation, service, specifications, maintenance, warranty, and other useful facts. While reading your Grady-White manual, you will find other technical literature referenced as resources for detailed information. The Owner's Packet will also consist of operation guides, informative labels and product warranties you will need to be acquainted with. Your Owner's Packet can also be used to retain instructions and data compiled on additional equipment and accessories installed after delivery.

SPORTFISH, CRUISERS, YACHTS OWNER'S MANUAL, a book published by the National Marine Manufacturer's Association (NMMA), has been included with your Owner's Packet as a supplement. This publication will be referenced in your Grady-White Owner's Manual to present additional instructions and information on basic boating.

WARRANTY INFORMATION

The Grady-White warranty is located on the last page of this manual. Upon the purchase of your new Grady-White Boat, the dealer will fill out a warranty card. This card will be kept on file at the dealership and at the Grady-White factory. A copy will be provided for your records and should be kept with other valuable documents for future reference. For questions regarding your warranty please contact your dealership.

DEALER'S RESPONSIBILITIES

Throughout the fabricating and assembly processes your Grady-White has undergone a series of strict inspections. Subsequent to the final factory overview your dealer must perform additional pre-delivery checks and approve your Grady-White for delivery.

Dealer responsibilities include providing the following:

- An orientation of the general operation of your Grady-White.
- A warranty card to be completed and signed by the dealer and the customer. This warranty card is to be sent to Grady-White Boats to validate the warranty.
- An explanation of safety issues regarding the use of containment systems and components.
- A complete Owner's Packet containing literature and information regarding your Grady-White and its separate warranted product's operation, installation and maintenance instructions.
- A review of all warranties, pointing out the importance of mailing warranty and registration to various manufacturers within the required time limits.
- Guidance on acquiring local and out of area service during and out of warranty periods.

CONSUMER RESPONSIBILITIES

The following are responsibilities of the Grady-White owner:

- Read and understand the express limited warranty.
- Study in detail all literature and instructions enclosed and use all equipment in accordance.
- Examine the boat and confirm all systems are working suitably at the time of accepting delivery.
- Render proper maintenance and periodic servicing of the boat in accordance with suggestions in the Owner's Manual.
- Return the boat, following 20 hours of operation, to the selling dealer for a 20 hour inspection.

Grady-White Boats has a permanent record of your boat, which is retained under its "**H**ull **I**dentification **N**umber" (HIN). Data regarding equipment and accessories, as well as dealer/shipping information is documented. When contacting your dealer concerning warranties or service, please have all relevant information such as serial numbers (HIN) and model number available. This information is on your copy of the warranty card.

The "**H**ull **I**dentification **N**umber" is located on the starboard side of the transom, and is a significant source of identification and must be noted in all correspondence and orders. Failure to include the HIN only creates delay.

HAZARD WARNING SYMBOLS

The hazard warning symbols shown below are applied throughout this manual to alert the customer of potentially dangerous situations which can lead to death, personal injury and/or product damage. We urge you to observe these warnings and comply with all safety recommendations.

⚠ DANGER

THIS SYMBOL ALERTS YOU TO IMMEDIATE HAZARDS WHICH *WILL* CAUSE SEVERE PERSONAL INJURY OR DEATH IF THE WARNING IS IGNORED.

⚠ WARNING

THIS SYMBOL ALERTS YOU TO HAZARDS OR UNSAFE PRACTICES WHICH *COULD* RESULT IN SEVERE PERSONAL INJURY OR DEATH IF THE WARNING IS IGNORED.

⚠ CAUTION

THIS SYMBOL ALERTS YOU TO IMMEDIATE HAZARDS WHICH *COULD* RESULT IN MINOR PERSONAL INJURY, OR CAUSE PRODUCT OR PROPERTY DAMAGE IF THE WARNING IS IGNORED.

NOTICE

THIS SYMBOL CALLS ATTENTION TO INSTALLATION, OPERATION OR MAINTENANCE INFORMATION WHICH IS IMPORTANT FOR PROPER OPERATION, BUT IS NOT HAZARD RELATED.

TABLE OF CONTENTS

WELCOME ABOARD

CONSUMER INFORMATION Owner's Packet, Warranty Information, Dealer's Responsibilities, Consumer Responsibilities, Hazard Warning Symbols

CHAPTER 1 SAFETY

Required Safety Equipment **1-1**
Fire Extinguisher 1-1
Personal Flotation 1-1
Sound Signaling Device (Horn) 1-1
Visual Distress Signals 1-1
Lighting 1-1
Additional Recommended Equipment **1-1**
Registration Numbers **1-1**
Emergency Stop Switch **1-2**
Emergency Information **1-2**
Rendering Assistance 1-2
Accident Reporting 1-2
Lightning Precautions 1-2
Boating Safety Tips **1-3**
Loading Capacity **1-4**
Carbon Monoxide **1-5**
Suggested Boating Classes and Reading Material **1-6**

CHAPTER 2 GENERAL INFORMATION

Fueling **2-1**
Fuel System **2-2**
Fuel Select Valve **2-2**
Discharge Regulations **2-3**
Discharge of Oil **2-3**
Disposal of Plastics and Other Garbage **2-3**
Trailering **2-4**
Predeparture **2-4**
Approaching/Leaving the Dock **2-4**
Towing **2-4**
Anchoring **2-4**
Shallow Water **2-5**
General Information on Boat Handling **2-5**
Twin Engine Boats **2-6**
Commonly Used Nautical Terms **2-7**

TABLE OF CONTENTS CONTINUED

CHAPTER 3 PERFORMANCE

Performance Factors **3-1**
Engine Efficiency 3-1
Weather Conditions 3-1
Load Distribution 3-1
Marine Growth 3-1
Propeller **3-1**
Trim **3-2**
Propulsion System **3-2**
Engine Warranty **3-2**
Throttle/Shift Control **3-2**
Steering
Mechanical Steering 3-3
Hydraulic Steering 3-3
Tilt Steering 3-3

CHAPTER 4 MAINTENANCE AND SERVICE

General **4-1**
Exterior Fiberglass Finish **4-1**
Maintenance 4-1
Cleaning 4-1
Finish/Waxing 4-1
Repairing 4-2
Bottom Paint **4-3**
Grady Drives **4-3**
Canvas **4-3**
Maintenance 4-3
Snaps 4-4
Vinyl 4-4
Storage 4-4
Upholstery **4-4**
Duratrim/Polyethylene/Plexiglas **4-5**
Shower Sump **4-5**
Scuppers **4-5**
Caulking **4-5**
Hardware Mounting **4-5**
Hardware/Hardtop Frame/Stainless Steel Rails **4-6**
Maintenance 4-6
Fuel Tank Compartment **4-7**
Batteries **4-8**

TABLE OF CONTENTS CONTINUED

CHAPTER 5 WINTERIZATION AND STORAGE

General..... 5-1
Boat Storage..... 5-1
Cleaning and Lubricating the Boat..... 5-2
Draining and Water Systems..... 5-2
Fuel System..... 5-2
Batteries..... 5-3
Engines..... 5-3
Storage Checklist..... 5-4

CHAPTER 6 MODEL SPECIFIC INFORMATION

TABLE OF CONTENTS PAGE – For Information on Your Grady-White Boat..... 6-1

WARRANTY

TRANSFERABLE WARRANTY

CHAPTER ONE
SAFETY

REQUIRED SAFETY EQUIPMENT

The US Coast Guard (USCG) requires that every boat have specific equipment on board. Check with local regulations on mandatory equipment apart from the list of Coast Guard requirements. See *Sportfish, Cruisers, Yachts Owner's Manual,* page 17, for details on the following required safety equipment.

FIRE EXTINGUISHER

Boats should be equipped with a marine approved fire extinguisher.

PERSONAL FLOTATION

All passengers must have an USCG approved personal flotation device (PFD). **Children and non-swimmers are advised to wear a PFD at all times.**

SOUND SIGNALING DEVICE (HORN, BELL OR WHISTLE)

Your Grady-White is equipped with a horn that meets USCG requirements.

VISUAL DISTRESS SIGNALS

USCG approved visual distress signals are required on U. S. waters.

LIGHTING

Grady-White boats are equipped with navigational lights that meet requirements for inland and international waters.

ADDITIONAL RECOMMENDED EQUIPMENT

In addition to the required safety equipment there are additional items that will provide an extra margin of safety and convenience for you and your passengers while boating. For an extended list of basic gear, tools and spare parts reference the pamphlet *Sportfish, Cruisers, Yachts Owner's Manual* enclosed with this manual.

Keep tools and spare parts in good condition. Replace parts removed from spare parts kit. Most importantly use US Coast Guard approved or marine certified parts where applicable. Conditions found requiring corrective action should be worked on by a qualified repairman.

REGISTRATION NUMBERS

Federal and State laws require a powerboat to be registered in the State where it is primarily used. Registration numbers and validation stickers must be displayed according to regulations. The registration certificate must be on board when boating. The boat serial number or Hull Identification Number (HIN) is required on the registration form. The HIN is located on the upper right hand corner of the transom and is the most important identifying factor. The HIN should be included on all documents and any correspondence to provide you timely service.

SAFETY

EMERGENCY STOP SWITCH

Some Grady-Whites are equipped with an emergency stop switch. This is a safety feature that if used properly will shut the engines down if the operator leaves or falls from the helm position. This ignition shutdown switch includes a shut-off switch, switch clip, lanyard and lanyard clip. The lanyard clip is attached to the operator. If a situation arises where the boat should stop, a pull on the cord to release the clip from the shut-off switch will shut down the engines. To reset the emergency stop switch simply reinstall the switch clip. The decision to use the emergency stop switch rests with the owner/driver. See page 72 in *Sportfish, Cruisers, Yachts Owner's Manual.*

EMERGENCY INFORMATION

While boating unpleasant situations may develop. When emergency situations materialize you should prepare yourself on how to cope with them whether they happen aboard your vessel or someone else's. Anticipate a gameplan for specific situations such as fire, man overboard or collision etc., to give you the confidence and ability necessary for an emergency. The key is to remain calm. For emergency procedures, see Section 4 in *Sportfish, Cruisers, Yachts Owner's Manual.*

RENDERING ASSISTANCE

The owner or operator of a vessel is required by law to render all practical or necessary assistance to any person or vessel affected by collision, accident or casualty. **However, you should not endanger your vessel or passengers to render assistance**.

ACCIDENT REPORTING

Report all boating accidents to your local authorities. Federal regulations require boat operators that are involved in an accident to submit a written report within 48 hours. ***In the event of death or disappearance notification is required immediately*** by phone or radio in addition to the written report. These reports can be submitted to the State Boating Law Administrator. Forms can be obtained through the USCG, local harbor patrol offices, sheriff and police stations.

LIGHTNING PRECAUTIONS

This awareness is included to ensure the safety of the owner and passengers. Always be mindful of the weather! When a lightning storm advances certain safety precautions should be taken. Dock the boat and seek shelter on land. If this is not possible seek refuge inside the boat until the storm has passed. **Stay out of the water!** Lightning will seek a ground when it strikes and may pass through metal components if it hits your boat. For this reason avoid contact with metal parts of the boat under these conditions.

SAFETY

BOATING SAFETY TIPS

Safety is an important aspect of boating. Your safety as well as the safety of your passengers and vessel is your responsibilities. The following precautions and the ones mentioned in *Sportfish, Cruisers, Yachts Owner's Manual* will add to you and your passengers' boating safety and pleasure.

- Before operating your Grady-White **READ AND STUDY ALL OPERATION AND MAINTENANCE MANUALS**. It is important that you fully understand how to use your boat. Contact your Grady-White dealer for questions. Proper use and service will insure quality performance and longevity of your boat.

- A written float plan left with a RESPONSIBLE person can serve as valuable information should you not return as scheduled. Upon returning your primary responsibility is to notify the person of your return.

- ***NEVER* operate or allow anyone to operate your boat while under the influence of drugs or alcohol.**

- Instruct at least one passenger on the fundamentals of basic boating and safe operation in the event of an emergency.

- While boating passengers should be settled in a safe position. Use handholds and rails for steadiness. Do not allow bow, transom or gunwale riding.

- Keep your boat speed under control. Respect for other boaters and those on shore are common courtesy. The boats' operator is responsible for injury or damage caused by the boat or the wake. Your wake could swamp a smaller craft and endanger its passengers. Stay alert for posted "**No Wake Zones**".

- Become familiar with the handling personality and limitations of your boat.

- **Never allow swimmers/skiers to enter or exit the boat with engines running**. A shift lever in neutral could become engaged accidentally.

- Obtain information and a chart for new areas when possible.

- Clean water and air are responsibilities for all persons. Use litter containers on board and dispose of refuse properly. See discharge regulations in next section.

- **Individuals under the age of 16 should not be allowed to operate your boat. Inexperienced drivers should have constant and direct supervision**.

- Know and obey the "Rules of the Road". See *Sportfish, Cruisers, Yachts Owner's Manual,* page 19, for a better understanding of right of ways, signals and waterway markers.

LOADING CAPACITY

Though overloading is a primary cause of many boating accidents improper loading is equally hazardous. Boaters should know the amount of weight on board and evenly distribute the weight.

Near the steering wheel you will find a metal Coast Guard Capacity Information Tag indicating the maximum weight and person capacity for your boat. This tag will also designate the maximum horsepower limit for an outboard. You and your passengers will be in jeopardy and your warranty void if any of these stipulations are exceeded.

The capacity plate indicates maximum load under normal conditions. The capacity plate does not release the operator from the accountability of rational judgment. Allow yourself an extra margin in rough waters and adverse conditions by reducing the boat's capacity. Maintain a watch on weather conditions.

Example: 208 Adventure
Capacity Plate

This label means that your Grady-White is certified by the NMMA (National Marine Manufacturers Association). With this tag you are assured that your fuel system, lighting, ventilation, steering, flotation, capacities and horsepower ratings are not only in compliance with the US Coast Guard regulations but meet the more stringent standards of the NMMA. The NMMA is a national trade organization serving all elements of the recreational boating industry, as well as manufacturers of boating equipment. With this tag, you can have complete confidence in the safety of your Grady-White.

CARBON MONOXIDE

DANGER

DO NOT INHALE EXHAUST FUMES! EXHAUST FUMES CONTAIN CARBON MONOXIDE, A DANGEROUS AND POTENTIALLY LETHAL GAS.

Exhaust fumes contain carbon monoxide (CO), an odorless and colorless gas. Carbon monoxide is poisonous and a health hazard that can be fatal if breathed over an extended period of time. Symptoms of CO poisoning can include: dizziness, nausea, headache, sleepiness, vomiting, throbbing in temples, muscular twitching and the inability to think clearly. **If you or anyone else experience these symptoms immediately get away from fumes and into an area where plenty of FRESH air can be consumed. If any symptoms from above persist seek medical attention.**

Carbon Monoxide is the gas formed by the combination of one molecule of carbon and one molecule of oxygen. Chemists refer to it as CO, its chemical formula "C" for carbon and "O" for oxygen. Its weight is about the same as air so it cannot be expected to rise or fall like some other gases but will distribute itself throughout space.

Carbon monoxide can accumulate in cabins and under canvas. If your boat is equipped with canvas that encloses the aft cockpit and the propulsion equipment, **do not** operate the boat with this canvas closed.

The boat operator should be aware that CO is emitted from *any* boat's exhaust. The operation, mooring and anchoring in an area containing other boats may be in an atmosphere containing carbon monoxide that is not of the operator's making. An operator, likewise, needs to be aware of the consequence of his actions on other boats. Of primary concern is the operation of an auxiliary generator with boats moored along side each other.

⚠ WARNING

***BE AWARE* of the significance your exhaust may have on other vessels. Likewise, *BE AWARE* that the operation of other vessel's equipment may influence the carbon monoxide concentration on *your* vessel.**

⚠ WARNING

When operating center console or cuddy cabin at cruising speeds, slow speeds, or dead in the water with canvas tops, side curtains and/or back curtains in place be aware of engine exhaust to ensure that emissions do not accumulate in the interior. Maintain proper ventilation by adjusting canvas enclosure.

SUGGESTED BOATING CLASSES AND READING MATERIAL

Like a car, boats must be operated according to safety rules and traffic regulations. Although we include some basic boating tips in this manual, a thorough review of the safety rules and regulations for boating is beyond the scope of this text.

We support the work of the United States Coast Guard Auxiliary and the United States Power Squadrons. We urge you to exercise the opportunity to attend any instructional classes sponsored by these organizations. Reference page 8 of *Sportfish, Cruisers, Yachts Owner's Manual* for training options and page 23 for information on charts and maps. For further knowledge on boating we advise that you review the following publications.

PILOTING, SEAMANSHIP AND SMALL BOAT HANDLING
(Chapman)*
Motor Boating and Sailing
Post Office Box 2319 -- F.D.R. Station
New York, New York 10022

*Available on CD ROM

PLEASURE BOATING AND SEAMANSHIP
US Coast Guard Auxiliary
306 Wilson Road Oaklands
Newark, Delaware 19711

BOATMAN'S HANDBOOK
by Tom Bottomly
Motor Boating and Sailing
Post Office Box 2319 -- F.D.R. Station
New York, New York 10022

FOR MORE INFORMATION ON BOATING SAFETY COURSES IN YOUR AREA CALL
BOATING EDUCATION HOTLINE 1-800-336-BOAT (2628),
US COAST GUARD BOATING HOTLINE 1-800-368-5647 or
CONTACT YOUR LOCAL COAST GUARD.

CHAPTER TWO
GENERAL INFORMATION

FUELING

⚠ WARNING

Safety during fueling requires CAUTION and COMMON SENSE.

Please study the following precautions carefully and ask your dealer if you have questions. Check your engine manual to confirm the type of fuel specified by the manufacturer. Do not use fuel containing alcohol. Alcohol in fuel will deteriorate the rubber material used to make up your fueling system. For outboards with an oil injection system check the engine manual for the approved type of oil and fill the tank completely.

- Have a fire extinguisher near.
- Observe all safety regulations for the safe handling of fuel.
- Extinguish cigarettes and all other lighted materials.
- Before fueling shut down all engines.
- Before fueling close all ports, hatches, windows and engine compartments to prevent fumes from accumulating in closed areas.
- Before fueling turn battery select switch(es) to "OFF" to insure that all fans, lights, etc. are off
- Keep the fuel supply nozzle in contact with the fuel tank opening to prevent any static sparks.
- Secure the fuel cap and check fuel lines and connections for leakage. Wash and clean up any spilled fuel. Dispose of clean up rags or sponges on shore. Do not store these clean up rags in the boat.
- After fueling ventilate all ports, windows, hatches and other closed areas. Conduct a "sniff test" to make certain all fumes are vacant before using the battery select switch(es).
- Select your first tank cautiously. Take into consideration the distribution of your load as fuel is consumed. Performance will be influenced by weight distribution. If your boat is equipped with two fuel tanks use the fuel select valve (see FUEL SELECT VALVE on next page) to select the proper tank.

Do not use fuels containing alcohol. Alcohol, particularly methanol, absorbs water that makes fuel more corrosive to the metals in tanks and carburetors.

FUEL SYSTEM

After fueling inspect the fuel hoses, connections and tanks for tightness, signs of leaks and deterioration. Annually, conduct a more detailed inspection of fuel system components especially those hidden from routine inspection. Replace deteriorated hoses, clamps, connections or fittings immediately.

If you are experiencing fuel flow problems there is a simple method to determine if the problem is in your fuel system or your engine. Connect a six-gallon portable tank to your engine. If the problem persists the likely cause is with the engine(s) itself. If the problem goes away the source must be in the boat fuel system. One component that should be inspected if a restriction occurs is the anti-siphon valve. If fuel does not flow properly through this part it must be cleaned and/or replaced. DO NOT remove the anti-siphon valve and replace with a regular barb.

WARNING

LEAKING FUEL IS A FIRE AND EXPLOSION HAZARD. INSPECT SYSTEM REGULARLY. EXAMINE FUEL SYSTEM FOR LEAKS OR CORROSION AT LEAST ANNUALLY.

© NMMA 1990/ NO. 200

FUEL SELECT VALVE

If your boat is equipped with dual fuel tanks you will have a manual fuel select valve installed. This valve allows you to choose from which tank fuel will be consumed. Remember, as the fuel is consumed and the fuel load redistributes the performance will be influenced. Select the tank that allows the best performance for your boat.

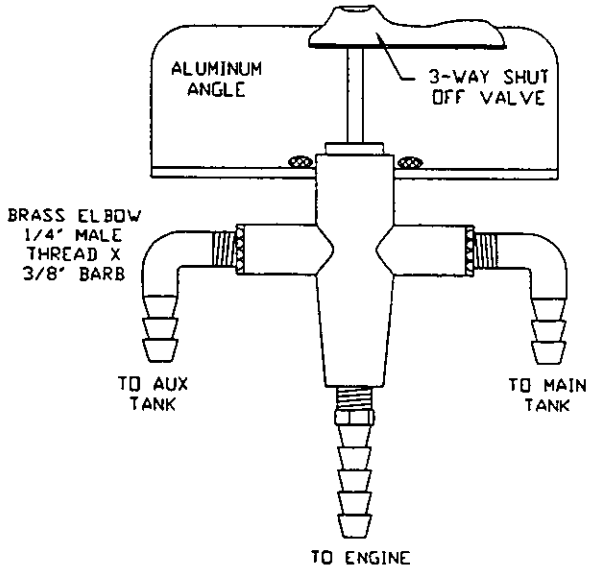

GENERAL INFORMATION

DISCHARGE REGULATIONS

The Federal Water Pollution Control Act prohibits the discharge of oil or hazardous substances that may be harmful into the US navigable waters. All crew and passengers should be made aware of the discharge restrictions.

DISCHARGE OF OIL

The Federal Water Pollution Control Act prohibits the discharge of oil or oily waste into or upon the navigable waters and contiguous zones of the United States; if such discharge causes a film or sheen upon, or discoloration of the surface of the water, or causes a sludge or emulsion beneath the surface of the water. Violators are subject to a penalty of $5,000.

DISPOSAL OF PLASTICS AND OTHER GARBAGE IN WATERS OF THE UNITED STATES

NOTICE
It is illegal for any vessel to dump PLASTIC trash anywhere in the ocean or navigable waters of the United States.

The MARPOL ANNEX V is the Act to prevent pollution from ships and other vessels. Federal regulations prohibit the discharge of plastic garbage anywhere in the marine environment. Plastic includes but is not limited to: synthetic fishing nets, ropes, lines, straws, six pack holders, styrofoam cups and lids, bottles, buckets and plastic bags. These regulations also restrict the disposal of other types of garbage within specified boundaries from shore. The following plaque will help you determine the specific distances offshore that certain garbage is permitted.

It is illegal for any vessel to dump plastic trash ***anywhere*** *in the ocean or navigable waters of the United States. Annex V of the MARPOL TREATY is an International Law for a cleaner, safer marine environment. Violation of these requirements may result in civil penalty up to $25,000, fine and imprisonment.**

U.S. Lakes, Rivers, Bays, Sounds and 3 miles from shore

ILLEGAL TO DUMP

Plastic	**& Garbage**
Paper	Metal
Rags	Crockery
Glass	Dunnage
Food	

3 to 12 miles

ILLEGAL TO DUMP

Plastic

Dunnage, lining & packing materials that float, also if not ground to less than one inch:

Paper	Crockery
Rags	Metal
Glass	Food

12 to 25 miles

ILLEGAL TO DUMP

Plastic

Dunnage, lining & packing materials that float

Outside 25 miles

ILLEGAL TO DUMP

Plastic

*UP TO $50,000 AND 5 YRS.

State and local regulations may further restrict the disposal of garbage.

GENERAL INFORMATION

TRAILERING

The adjustment and balance of your boat on the trailer determines how easily your boat may be transported. The tongue weight on the hitch ball should be 5-10% of the total weight of your boat, motor and trailer. Tail-heavy loads cause swaying while trailering. The rollers and/or bunkers of your trailer should be adjusted so that the weight is distributed evenly across the stern and forward throughout the keel sections. Your dealer can help adjust your trailer properly.

Trailering and relative information can be found on page 94 in *Sportfish, Cruisers, Yachts Owner's Manual.*

PREDEPARTURE

See the checklist on page 35 in *Sportfish, Cruisers, Yachts Owner's Manual* before starting out.

APPROACHING/LEAVING THE DOCK

Unlike an automobile, the stern of your boat reacts first when turning. A turn to the right will swing the stern to the left and vice-versa. Remember that turning your boat away from an object, such as a dock, will tend to swing the stern toward that object. Reference procedures for approaching and leaving the dock, in your publication of *Sportfish, Cruisers, Yachts Owner's Manual.*

TOWING

In the event of a mishap or power loss you may need to tow a boat or be towed. You should not tow a boat larger than your own. Always use safety and good judgement when towing. Never tow a boat if you are not equipped with the proper lines. Passengers should never grasp a towline it should be secured to the boat. See page 30 in *Sportfish, Cruisers, Yachts Owner's Manual.*

⚠WARNING

As a precaution passengers on both boats should stay clear of the towline, lines under stress could snap and fly in either direction causing injury.

ANCHORING

Some factors that determine the size and type of anchor most suitable for your boat include the size of your boat and the type of lake, sea or river bottom in your boating area. *Sportfish, Cruisers, Yachts Owner's Manual* has a list of tips concerning anchoring starting on page 46.

⚠WARNING

Never anchor off the stern of the boat especially in strong winds or currents. The weight of the stern and flat surface to the seas can easily cause water to enter over the transom and swamp the boat.

SHALLOW WATER

Most boats that become grounded can be floated off with motor(s) tilted to reduce the draft at the transom. Sometimes a rocking motion, side to side, will break the suction of mud from the keel. Disperse weight from the point the boat is grounded.

⚠ CAUTION
Do not lower or start engines if the propeller is in mud or sand. Wait until the boat is refloated to avoid damage to the cooling system(s) of your engine(s).

When boating in water with tidal changes be mindful of water level fluctuations. If you are grounded on an incoming tide you can wait until the tide is high enough to refloat your boat. However, if you are grounded on an outgoing tide you should act quickly to refloat your boat. If this is not possible set an anchor to keep the boat from being driven farther aground. The anchor can be set to counteract the wind or current. The anchor can also be used to help pull the boat free. Many inland areas have rocks and stumps that could crack or puncture a fiberglass hull. Be familiar with the boating area. Caution should be taken in shallow water.

GENERAL INFORMATION ON BOAT HANDLING

The best method of learning how to handle your Grady-White boat and obtaining the best performance from your boat is to practice and experiment. After several hours of operation you should experiment with the throttle settings to discover the setting that will be the most comfortable and economical range for your particular load conditions.

We suggest that you make a speed and RPM chart to obtain the most economical operation. Operate the boat at various speeds and check the fuel consumption. Compute the amount of operating time remaining when the fuel gauge drops into the red band. Make a log of this type of information and have it available when using your boat.

Further statistics you may want to determine could include the following:

- Minimum speed for effective steering.
- Turning radius at different speeds.
- Response to steering at low speeds.
- Accelerating and deceleration rates.
- Time and distance to bring the boat to a stop at different speeds.
- Control of the boat using both engines in close quarters.

Also read the section in *Sportfish, Cruisers, Yachts Owner's Manual* for information on safe operating speed.

TWIN ENGINE BOATS

Twin engines boats are easy to maneuver. The boat will run ahead or backward in a straight line when both engines are working together at the same speed. While backing the engines can be used to steer to port as well as starboard.

Moving ahead on one engine will cause the bow to swing away from the running engine side and to move forward at the same time. Backing up with one engine will cause the bow to swing toward the running engine side and the boat to move backward.

Running one engine ahead and one engine astern will cause the boat to turn end-for-end in little more than its own length.

Running both engines in the same direction at different speeds will cause the boat to move in the direction dictated by the faster engine but its influence will be modified by the slower engine.

GENERAL INFORMATION

COMMONLY USED NAUTICAL TERMS

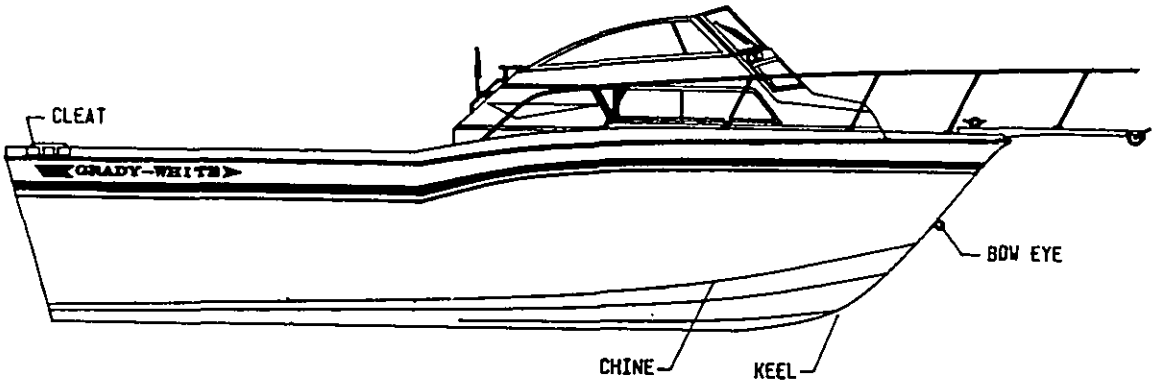

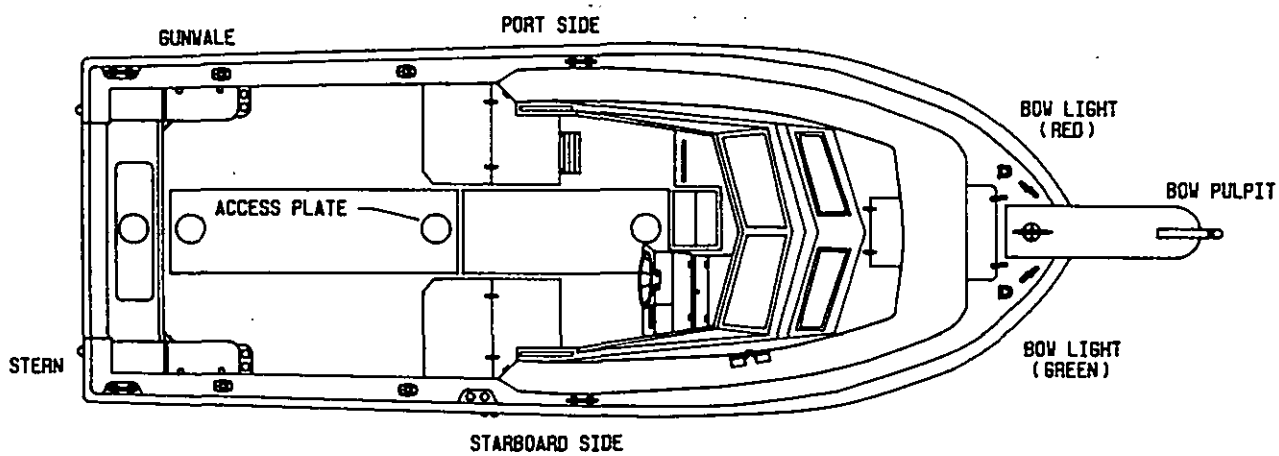

ABEAM - A line perpendicular to a boat's keel

ACCESS PLATE - A removable, watertight cover that provides quick entry to enclosed areas for maintenance or visual inspection

AFT - Toward the rear or stern of the boat

BEAM - The greatest width of a boat

BILGE - The lower interior area of the hull

BOW - The fore part of a boat

BOW EYE - A U-shaped hull fitting used to attach the trailer winch to the boat

BULKHEAD - Vertical partition in a boat

CHINE - Meeting juncture of topside and bottom of boat

CLEAT - Deck fitting with arms or horns on which lines are fastened

DECK - Upper structure which covers the hull

DRAFT - depth of water required to float a boat

FATHOM - A depth measurement equal to six feet

FREEBOARD - Height of topside from water line to the deck

GUNWALE (OR GUNNEL) - Meeting junction of hull and deck

HATCH - An opening in the deck to provide access below

HEAD - A toilet or toilet area in a boat

HEADROOM - Vertical distance between the deck and cabin or canopy top

HULL - The basic part of the boat; a watertight vessel that provides buoyancy to float the weight of the craft and its load

KEEL - The major longitudinal member of a hull - the lowest external portion of a boat

KNOT - Unit of speed in nautical miles per hour

LEE -The side that is sheltered from the wind

LIST - The tilt or lean to one side

PORT - A term designating the left side of the boat when facing forward

SCUPPER - Holes permitting water to drain overboard from deck or cockpit

SHEER - Curve or sweep of the deck as viewed from the side

STARBOARD - A term designating the right side of the boat when facing forward

STERN - The rear end of a boat

STRINGER - Longitudinal members fastened inside the hull for additional structural strength

WAKE - The track or path left in the water by a moving boat

WINDWARD - Toward the direction from which the wind is blowing (against the wind

CHAPTER THREE
PERFORMANCE

PERFORMANCE FACTORS

Maximum performance is dependent on many factors and cannot be guaranteed. These factors will vary with changing conditions. Some of these factors are listed below. Reference the trouble-shooting guide on page 65, in *Sportfish, Cruisers, Yachts Owner's Manual.*

ENGINE EFFICIENCY

Assuming your boat is equipped with the correct engine, the engine is properly tuned and the drive system is in good condition, operation will be most efficient at the RPM stated in the engine manual. Efficiency will decrease if normal care and maintenance are not performed. If the engine is neglected, power will drop and speed will decrease. In addition expensive repairs may become necessary. Be sure to follow all instructions in the engines' Operation Manuals.

WEATHER CONDITIONS

Weather conditions sway engine performance. Barometric pressure and humidity affect horsepower. A change of weather could amount to a 10% loss in horsepower on some hot days.

LOAD DISTRIBUTION

A decrease in performance will be noted when gear, equipment, passengers and fuel are added. This extra load will affect the performance of your boat according to the distribution of the weight. Another type of extra load that could affect performance is the accumulation of water in the bilge. Keep the bilge dry to eliminate this type problem.

MARINE GROWTH

Maximum performance is only obtained when your hull bottom is clean. Growth on the bottom of the boat will increase resistance and decrease speed. These conditions will also increase fuel consumption.

PROPELLER

The condition of the prop has a major influence on the performance of your boat. The engine should be equipped with the best size prop for normal conditions. Unusual uses or weight conditions may require special props. A damaged prop can affect your boat's top speed, cause vibrations, create a sudden drop in RPMs or even increase fuel consumption.

⚠ CAUTION

When replacing propellers stay within the engine manufacturers maximum and minimum RPM ranges. This information is covered in your engine Manual. If your boat does not have a tachometer consult your dealer for propeller changes.

PERFORMANCE

TRIM

Most outboard models are equipped with power tilt and trim mechanisms. The purpose of power tilt is to raise the engine for launching, loading or trailering. Power trim may be used to adjust the boat's planing performance and running attitude. See power trim, page 52 and 72, in *Sportfish, Cruisers, Yachts Owner's Manual.*

PROPULSION SYSTEM

OUTBOARD

Information concerning the outboard engine(s) is located in the Operation and Maintenance Manuals supplied by the engine manufacturer. Details on engine functions such as the lubrication system, cooling system and alarm/monitoring system are outlined in these manuals. Your familiarization with this engine reference material will result in the proper usage and service that is essential for safe and enduring engine performance. These manuals are included with the Owner's Packet.

⚠ DANGER

DO NOT INHALE EXHAUST FUMES! EXHAUST CONTAINS CARBON MONOXIDE, A GAS THAT IS DANGEROUS AND POTENTIALLY LETHAL.

⚠ WARNING

Do not attempt to service any engine or drive component without being totally familiar with the safe and proper service procedures. Certain moving parts are exposed and can be dangerous.

⚠ CAUTION

Do not paint the outboard motor with anti-fouling paint designed for boat hulls. Many of these paints can cause severe damage to the engines.

ENGINE WARRANTY

A warranty registration card is included with all engine manuals and should be completed and returned to the engine manufacturer as soon as possible.

THROTTLE/SHIFT CONTROL

The throttle/shift control, located at the helm, control the flow of fuel to the engine and act as a gear shift lever to control the forward and aft thrust of the propeller.

For more information and a diagram of single and twin controls see page 70 and 71 in *Sportfish, Cruisers, Yachts Owner's Manual.*

If your throttle or shift cables need replacing use the same style and length as the original equipment.

STEERING

MECHANICAL STEERING

Grady-White boats that use mechanical steering are equipped with No Feedback Mechanical Steering. No feedback steering provides easier steering and increased control by offsetting the engine torque.

The mechanical steering system is designed to require a minimum of maintenance; however, you should periodically inspect the steering system (especially the control heads, cable ends and attachments) for wear, rust or corrosion and lubricate the parts when needed. If you notice a change in the "feel" of the system such as binding, looseness, noise or sticking immediately have a qualified marine technician perform a thorough check.

On outboard models the push rod at the end of the cable is vulnerable to freezing if it is not greased routinely. When the boat is not in use the motor should be turned so that the push rod is not exposed to the elements. If you operate in salt water areas, lubrication is extremely important and you should make frequent inspections for corrosion.

HYDRAULIC STEERING

Hydraulic steering systems (not to be confused with power steering) require regular preventative maintenance for continued safe and reliable operation. The oil level in the helm pump must be maintained within acceptable operating levels. A low oil level will allow air to get into the steering system and result in unresponsive steering. The oil level should always be within 1/2 inch from the base of the fill hole, located on the front top portion of the helm pump. Check the entire steering system regularly for oil leaks. Unobserved leaks over a period of time will result in unresponsive and/or possible loss of steering.

All moving mechanical linkages, sliders, etc. must be greased as needed with a high quality marine grease. Refer to the steering manual for specific recommendations and additional maintenance requirements.

Any slow or sudden change in the "feel" of your steering system indicates an immediate need for a thorough inspection. All repairs and replacements to steering systems should be made only by a qualified marine technician.

TILT STEERING

Tilt steering is available as an optional feature on certain models. This accessory will be in conjunction with either mechanical steering or hydraulic steering depending on the model. This feature enables the operator to tilt the wheel up or down. Refer to the steering system's manual for information on oil levels with hydraulic tilt steering.

CHAPTER FOUR
MAINTENANCE AND SERVICE

GENERAL

The amount of maintenance required to keep your boat operating properly and to maintain the appearance is dependent on how the boat is used, amount of usage, salt or fresh water, geographic location, etc.

Your hull and deck are constructed by the "hand lay-up method" using the highest quality fiberglass mat and woven roving. This method of construction ensures a proper fiberglass-to-resin ratio and a uniform thickness which together result in a much stronger boat than those constructed of "chopped glass". This is an expensive process but ensures that your Grady-White is the strongest most durable fiberglass boat possible.

Keep the bilge area clean and dry. Leaks found early and corrected will less likely cause damage. Do not allow grease, grime and dirt to build up.

Proper maintenance of your boat is not only a source of pride; it is the key to maintaining your boat's value. A few simple steps will keep your fiberglass Grady-White looking showroom bright for years.

EXTERIOR FIBERGLASS FINISH

The exterior finish of your Grady-White is a thin layer of resin with a finished color pigment called gelcoat. It is used for cosmetic purposes and makes routine maintenance relatively simple. Although gelcoat has a hard smooth surface, it does contain microscopic pores that will allow surface discoloration if not kept clean.

MAINTENANCE

Normal exterior finish maintenance of your Grady-White is similar to the care you would give your automobile. Do not use caustic, highly alkaline cleaners or those containing ammonia. These cleaning agents may darken gelcoat. The resulting stain is a chemical reaction and can be removed with a rubbing compound followed by waxing.

CLEANING

The best way to prevent discoloration and soil build-up is to hose the boat with fresh water after each outing or on a regular basis. This build-up is the result of use and environmental pollutants. Clean the boat regularly with a mild household detergent and plenty of fresh water. Use a sponge on smooth surfaces and the deck. A brush can be used on the nonskid areas. Rinse away all grime and residue.

FINISH/WAXING

Gelcoat will age or dull naturally. As the gelcoat begins to lose gloss from constant exposure to the natural environment and pollutants it will require some special attention to restore the original gloss and color.

Polishing compound (fine abrasive) or rubbing compound (coarse abrasive) is recommended for use on fiberglass finishes to remove scratches, stains or restore severely weathered surfaces. Compound can be applied by hand or mechanical means. The following process will help restore your fiberglass finish:

- Clean the affected area with a good detergent.
- Remove stubborn stains or discoloration by gently wet sanding the affected areas with 600 grit "wet or dry" sandpaper. **ALWAYS SAND IN ONE DIRECTION.** Use plenty of water and sand curves in the same direction. Dry the area to make sure all the discoloration has been removed. Repeat this process if necessary.
- Buff using a polishing compound suitable for fiberglass, an electric buffer (1750-1800 RPM) and an 8-inch lamb wool pad.

⚠CAUTION
Keep buffer moving. Do not allow it to rest in one spot. Heat build up will quickly distort the surface.

- When buffing is complete wash away compound with clear water then dry.

⚠CAUTION
Excessive compounding can wear away the gelcoat.

- Once the area is clean it may be waxed. This will enhance the gloss while providing a seal to retard staining or soil accumulation.

Check with a local dealer for advice on a suitable wax for that region. The wax film will seal the pores as well as enhance the looks of your boat. **DO NOT wax surfaces that may be walked on as they will become slippery**. While waxing your boat inspect the surface for any damage. Have the damage corrected as soon as possible.

REPAIRING

Gelcoat is a very durable material but is susceptible to scratches, blistering, and web-like cracks (crazing) over time. Gelcoat is elastic enough, however, to withstand strong blows while flexing with the hull's movement. Gelcoat problems are cosmetic and will not effect the structural integrity of your boat.

Some gelcoat damage and imperfections such as nicks and scratches can be repaired by obtaining a color match patch kit. This kit and instructions can be purchased through your Grady-White dealer. Acetone, a cleaning agent for gelcoat, can also be purchased through your dealer.

⚠WARNING
M.E.K. (Methyl ethyl ketone peroxide), gelcoat and acetone are flammable and hazardous chemicals that must be handled properly. Follow instructions on the containers carefully. After the gelcoat is catalyzed it will soon heat up and put off fumes. When finished with catalyzed chemicals or if they start to build up heat submerse completely in water until cool.

MAINTENANCE AND SERVICE

BOTTOM PAINT

If you leave your boat in the water for more than a few days the hull bottom, below the waterline, should be treated with anti-fouling paint. This paint will help protect the bottom from marine growth and barnacles that inhibit performance. Since anti-fouling paint slowly dissolves to prevent marine growth yearly inspection and cleaning of the hull bottom is advised. Repaint whenever necessary. We suggest the use of an epoxy barrier coat to be applied in conjunction with the anti-fouling paint to help prevent blistering. For more information see your local dealer.

GRADY DRIVES

Moisture may enter the engine bracket so a drain has been provided. Any moisture entering the bracket should drain to the bottom. The drain plug should be removed periodically to drain the bracket. The Grady Drive is made of aluminum therefore use the proper type of bottom paint.

CANVAS

Grady-White's canvas is made using the highest quality vinyl and latest sewing techniques. The canvas will not be completely leak proof. The seam holes in your canvas may stretch and tend to leak. However, you can correct this problem by applying Apseal® or Uniseal™ to the seams.

Please understand that Grady-White does not warrant the fit and design of the canvas to be entirely watertight.

MAINTENANCE

To maintain your boat's top and other canvas follow these guidelines:

Fabric should be cleaned regularly to prevent the buildup of soil and penetrate the fabric. Simply brush off any loose dirt and hose down canvas and clean with a mild solution and warm water. Do not use petroleum-based or ammonia cleaners on canvas or clear vinyl as they will yellow. For heavily soiled fabric remove top from frame. Soak the fabric in a solution of 1/2 cup of Clorox and 1/4 cup of Ivory or Lux soap per gallon of warm water. Let soak until mildew and stains can be brushed out with a common kitchen brush. Rinse thoroughly with cold water until all soap is removed. Allow fabric to air dry completely. **DO NOT STEAM PRESS OR DRY IN AN ELECTRIC OR GAS DRYER**. This will damage the canvas fabric. Water repellent was applied to your canvas during manufacturing. After extended cleaning some of the repellent may have diminished and retreatment of the fabric is recommended. Do not use wax-based products. Use a water based repellent like Apseal® or Uniseal™. Scotchguard® is effective for short-term use only.

Apseal® is a register trademark of Astrup.
Uniseal™ is a trademark of Unitex. – See your local marine supply
Scotchgard® is a registered trademark of 3M.

SNAPS

- Zippers and snaps will loosen with use. Use care when starting the zipper to prevent damage. Lubricate the snap buttons and zippers with petroleum jelly.
- Fasteners should be unsnapped as close to the button as possible.

VINYL

- Clean clear vinyl thoroughly with denatured alcohol and then apply a protective layer of clear wax. **Do not** use paste wax, as it will turn the vinyl yellow. This process should be repeated as necessary to maintain the protective wax coating.
- Store and secure canvas before trailering.
- Dry all canvas before storing to prevent mildew.
- Remove the top, front and side panels; **roll** them for storage. This procedure is necessary to prevent the front and side vinyl pieces from cracking. **NEVER FOLD THESE PIECES!**

STORAGE

Consider the following steps when putting your folding top canvas option in the stored position:

- Fold the top and zip it into the canvas cover provided.
- Pivot the covered top into the stowed position on the foredeck. The canvas cover is equipped with a strap on each side and an eyelet in each strap. Place the eyelets over the male fasteners located on the port and starboard foredeck.
- Twist the male fastener 90 degrees to engage.

⚠ CAUTION
Secure the folded top when in the stowed position, this will prevent damage or the loss of your canvas.

UPHOLSTERY

Your exterior vinyl upholstery may be cleaned with a mild solution of household detergent and fresh water. Commercial cleaners for vinyl also work well.

Since the seams of your exterior upholstery are not waterproof your upholstery should be stored in the cabin or covered when not in use.

Most cabin cushions are removable and may be dry-cleaned. Some cabin cushions are of a Herculon-type fabric and may be cleaned with upholstery cleaner.

⚠ CAUTION
DO NOT MACHINE-WASH CABIN FABRICS.

DURATRIM/POLYETHYLENE/PLEXIGLAS

In the cockpit area of your boat duratrim is used for trim and polyethylene is used for the toe rails and rod racks. Duratrim has an appearance similar to teak but requires almost no maintenance. Maintenance of your duratrim should include regular cleaning with soapy water. Apply a surface protector at least twice per year. Polyethylene can be cleaned with products such as 409 or any spray and wipe cleaner. The use of glass cleaner and a soft cloth can maintain plexiglas, used to cover your instruments and radio box.

SHOWER SUMP

A shower in the head compartment drains into a contained "sump" which is used to prevent hair, soap scum and bacteria from accumulating in the bilge and creating odors. This sump should be cleaned regularly. The sump pump box contains a filter that should be rinsed with clean water. The filter should always be installed when using the shower to prevent the sump pump from becoming clogged.

SCUPPERS

Grady-White boats have self-bailing cockpits, meaning that water on the cockpit floor drains by gravity through large aft scuppers, **not** into the bilge. The aft drains (scuppers) have an external scupper flap assembly that restricts the flow of water back into the boat. Inspect the flaps periodically to make sure that they are free of debris. The scupper flaps may need periodic replacement if the rubber becomes damaged or no longer seals properly in the thru-hull.

CAULKING

Deck fittings, bow rails, window, hatches, etc., have been caulked or gasketed with the highest quality material to ensure a waterproof joint with the boat. However, the working action of normal use will tend to flex the joint and eventually break down the seal between them. Periodically inspect the caulking or gaskets for leaks. Recaulk or replace the gaskets necessary or have your dealer do the repair.

HARDWARE MOUNTING

When drilling holes to mount hardware, in the boat surface, seal each hole properly. Sealing will prevent water leakage that is crucial in fiberglass areas that have been reinforced with plywood. A hole sealed improperly allows water inside the fiberglass that leads to saturation of the plywood reinforcement.

MAINTENANCE AND SERVICE

HARDWARE/STAINLESS STEEL RAILS

The hardware on your Grady-White is made of laboratory grade 316 stainless steel and needs regular cleaning to maintain its "less staining" properties. The key to maintaining your stainless steel is to keep it clean with a mild solution of soap and **FRESH** water.

REQUIRED MAINTENANCE PROCEDURE FOR ANODIZED ALUMINUM COMPONENTS

Lean Bars, Rod Holders, T-Top and Hardtop Frames, Outriggers, Etc.

Due to the nature of anodized aluminum and the harsh exposure conditions of the marine environment, it is important to follow a required maintenance procedure. Failure to follow a preventative maintenance procedure will most likely result in aluminum pitting.

These parts must be washed periodically with a very mild soap and water solution. **Grady White recommends washing with a mild soap (such as Ivory Liquid) after each use and every two to three weeks if stored in an outside marine environment.** Strong cleaners and soaps must **not** be used; **never** use abrasive cleaners or products that contain chlorine bleach. These products can remove the anodized coating.

Give special attention to the upper tubes of a hardtop or T-top frame. The area just below the top is shielded by the canvas or fiberglass top and does not receive the natural rinse that rainwater provides. Failure to thoroughly clean and maintain this area will allow contaminates that attack the anodized aluminum to remain on the frame.

For maximum protection coat parts with a non-abrasive metal protector. The best protectors will displace moisture, remove contaminates, and leave a wax film protecting the anodized aluminum. Follow the application guidelines for the product you choose. A sample of one metal protector has been provided with your boat.

Metal Protectors:

Boeshield T-9	**Aluma Guard**	**Premier Polish**
PMS Products Inc.	**Rupp Marine, Inc.**	**Aquatech**
76 Veterans Dr.	**Unit 1104761 Anchor Ave.**	**6726 Netherlands Drive, Suite 200**
Holland, MI 49423	**Port Salerno, FL 34992**	**Wilmington, NC 28405**
800-962-1732	**561-286-5300**	**800-853-7760**

⚠ CAUTION

Do not use abrasive cleaning products, pads, steel wool or steel brushes. These products will damage the finish.

FUEL TANK COMPARTMENT

The fuel tank storage area needs to be rinsed periodically especially when used in a salt-water environment. Dirt that accumulates in this area attracts salt and causes salt crystals to form on your metal fuel tank. Salt crystals corrode most metal surfaces if left untreated over a period of time. To help protect your tank from rust and corrosion rinse the compartment with FRESH water. Remove the access plates from the fuel tank lid and inspect this area for leaks or unsecured lines.

The access plates on your fuel tank lids keep the fuel compartments sealed. Over time the opening and closing of these plates causes the o-rings to wear-out. Replace these o-rings as necessary to maintain the watertight integrity of the plates.

BATTERIES

Battery (ies) should be secured in a non-metallic tray to avoid electrolyte spills. An insulated boot should cover battery terminals. Fluid levels should be checked at least once a month depending on usage. Fill the battery to the upper level with distilled water. **Never** overfill the battery.

Keep terminals clean by scrubbing them with a stiff brush and a mixture of baking soda and water. Afterwards, apply a light coat of grease. The mixture should not enter the battery.

When not in use check the battery monthly by using a battery hydrometer that measures the specific gravity.

⚠CAUTION

Never disconnect the battery when the engine is running. This can cause damage to the charging system. When replacing your battery reference your engine Owner's Manual for recommended battery type and required performance specifications.

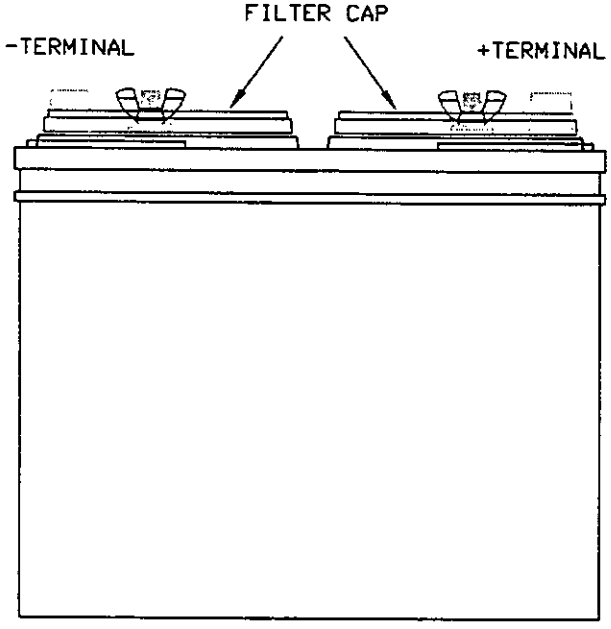

The battery contains sulfuric acid. Avoid contact with skin, eyes or clothing.

Antidote:
EXTERNAL - Flush with water
INTERNAL - Drink large quantities of water or milk. Follow with milk of magnesia, a beaten egg or vegetable oil. Contact physician immediately.
EYES: Flush with water and get prompt medical attention.

SHIELD EYES WHEN WORKING NEAR BATTERIES.

Batteries produce explosive gases. Keep sparks, flame and cigarettes away. Ventilate when charging or using in an enclosed space.

KEEP OUT OF REACH OF CHILDREN

⚠CAUTION

When disconnecting and reconnecting battery cables, the black cable must be connected to the negative terminal and the red cable must be connected to the positive terminal. Reversing this procedure will immediately damage your system.

CHAPTER FIVE
WINTERIZING AND STORAGE

GENERAL

For boats stored during the winter or an extended period of time some precautions should be taken. Prior to and during the storage process the boat and its systems should be checked for maintenance or repairs. Arrange repairs during the storage period. Avoid costly damage and delay when launching your boat by having it stored and winterized properly. See page 61, in Sportfish, Cruisers, Yachts Owner's Manual for a checklist on winterizing and storage.

BOAT STORAGE

To avoid personal injury and property damage it is advised to take extra precautions when lifting or moving the boat for storage. Grady-White Boats are equipped with stern lifting eyes and a bow towing eye. These eyes are provided for moving and temporary lifting. For permanent lifting, you will need to have or add a bow lifting ring option. Eyes should be inspected regularly to insure structural integrity.

⚠ WARNING

THE BOAT SHOULD NOT BE STORED BY USING THE PAD EYES, UNLESS THE BOAT IS EQUIPPED WITH A BOW LIFTING RING.
PAD EYES SHOULD BE INSPECTED PERIODICALLY IF USED FOR LIFTING.

While transporting a boat by a lift or tow motor the structure should remain as close to ground level as possible. If slings are necessary for lifting or transporting they should be in proper condition and tied together to prevent any movement (separating or slipping) which could cause damage to the boat. If tow motors are used to move the boat the forks should be padded and in a secure location under the hull near the chine. The forks should be long enough to prevent the boat from rocking forward and aft causing it to become unbalanced.

When storing your boat on the trailer raise and block the trailer axle to prevent tire deterioration. This is an excellent time to lubricate and pack the wheel bearings per the manufacturer's instructions.

Make sure the keel, chines and transom are fully supported. Indoor storage is beneficial particularly if your climate produces freezing weather. The storage unit should not be airtight but should be ventilated. Ventilation is extremely important both around and through the boat.

For outdoor storage use a canvas cover to prevent "sweating".

⚠ WARNING

BOATS WITH PLASTIC SHRINK WRAP DURING STORAGE MUST LEAVE THE FUEL FILL AND VENT FITTING OUTSIDE OF THE ENCLOSURE TO PREVENT THE TRAPPING OF DANGEROUS FUMES OR SPILLAGE FROM THERMAL EXPANSION.

WINTERIZATION AND STORAGE

CLEANING AND LUBRICATING THE BOAT

Clean and wax your boat before storage. If you store your boat in the water, there may be a layer of growth on the bottom. As it dries, this debris will harden. Clean, scrub and scrape the bottom promptly when the boat is removed from the water. Remove all marine growth and other foreign matter from the hull. Clean the inside of hull openings, thru hull fittings and scupper drains. Inspect the hull for damage.

Check cleats and rails for corrosion and tightness. Clean stainless steel as directed under MAINTENANCE AND SERVICE. Use a quality metal preservative like T-9™ on metal surfaces to prevent salt-water damage. Check for loose silicone, hinges and unseated gaskets. Replace or tighten where necessary. Heavy seas pounding and twisting the hull can cause leaks in your windows, doors and hatches. Check hinges for corrosion. Lubricate hinges as necessary.

DRAINING & WATER SYSTEM

Remove the garboard drain plug to keep the bilge dry. Store your boat with the bow elevated for drainage.

Drain all water tanks, lines and pumps to prevent freeze damage. The fresh water system may be drained by running any faucet until the tank is empty. When empty turn the faucet off to prevent pump damage. Residual water will not damage the tank. If desired, the fresh water system may have a non-toxic antifreeze added. This antifreeze can be purchased at marine or camping dealerships. To drain other lines close seacocks and run the pumps until the lines are dry then open the seacocks. In warmer climates draining will help prevent water stagnation.

Drain portable heads. Remember to drain the upper and lower tanks. Water should be removed from deck pump-out lines.

BATTERIES

Check the electrolyte level in your battery and fully charge the battery before storing. A weak battery loses its charge more rapidly than a strong battery. Ideally, you should disconnect the battery and cover the terminals with grease to prevent corrosion.

The T-9™ metal protection product was developed by Boeing Aviation for long-term protection of aircraft. It works by coating and penetrating fasteners and fixtures, displacing moisture and drying to a clear wax film that lubricates and protects metals for months. T-9 can be used to protect deck hardware, engines, electronics and fishing tackle.

WINTERIZATION AND STORAGE

ENGINES

See your engine Operator's Manual regarding the winterizing procedures. Follow instructions carefully and your engine may survive any severe weather conditions. Change all filters. Check hoses and clamps. If you have developed any vibrations during the season look for loose engine bolts, bent shafts or bent propellers.

FUEL SYSTEM

The fuel tank compartment should be rinsed with fresh water to keep salt crystals from forming and corroding the fuel tank. After rinsing, make sure all water is drained from the compartment.

Make sure your fuel does not contain alcohol. Fuels that contain alcohol will absorb humidity. The resulting condensation will separate from the fuel as temperatures drop during the winter months. An accumulation of this condensation can lead to fuel corrosion. There are also fuel additives available to inhibit condensation. Keep tanks full but do not overfill. This is also a good time to have your fuel filters/water separators replaced.

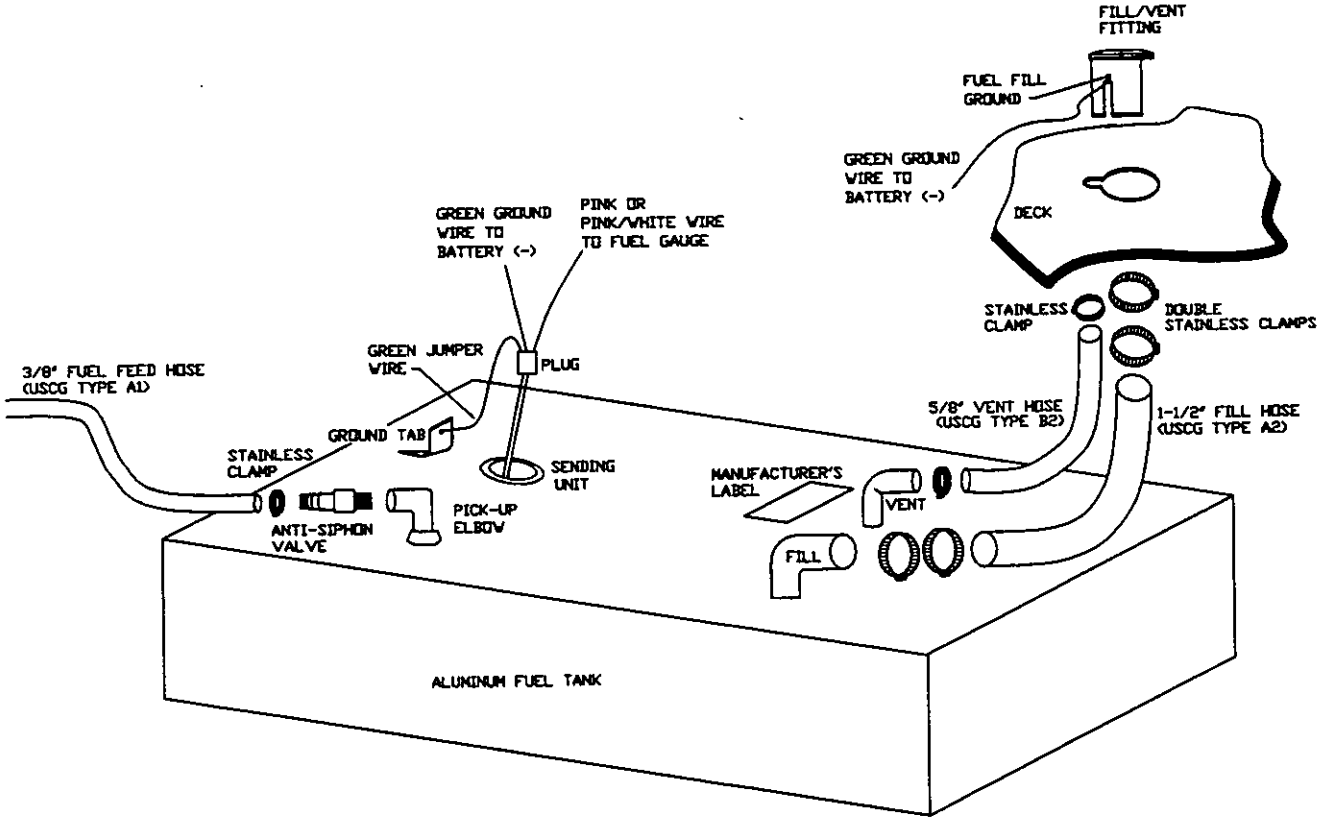

WINTERIZATION AND STORAGE

STORAGE CHECKLIST

In addition to winterization guidelines the following checklist can be used as a guide for storing your boat. Additional details should be added as needed for your personal application.

- Remove all loose items and personal effects.
- Remove any detachable and valuable equipment such as electronics. Store all electronics inside. Your compass, if built in, should be covered for the winter. Ultraviolet rays from the sun will "cloud" the compass and make it difficult to read.
- Winterize all equipment as directed in the manufacturer's manuals.
- Store cushions indoors to prevent mildew.
- Clean the exterior and interior of the boat. Remove all grease, oil, salt spray, etc..
- Remove all garbage. Clean storage compartments, fish boxes and livewells. Prop fishbox lids open.
- Lubricate hinges, valves, the backs of electrical panels and other surfaces that will rust.
- Check underwater items. Hardware should be in good condition and tight.
- Inspect electrical systems and have any repairs performed.

Grady-White Boats Transferable Warranty Form

(Not for original owner use)

*** Note: For second owner use in transferring remainder of 5 year hull structural warranty.**

Please complete the following:

Hull Identification # _____

Name: _____

Address: _____

City: _____ State: _____ Zip Code: _____

Telephone: _____ Dealership or Previous Owner: _____

ABOUT YOUR BOAT

1. What is your boat model number? (Example: 192, 272, etc.) _____
2. Date purchased? _____
3. What type of power is your boat equipped with?

   1 [ ] Single Outboard 2 [ ] Dual Outboard 3 [ ] Inboard/Outboard

4. Which engine brand does your boat have?

   1 [ ] Johnson 2 [ ] Mercury 3 [ ] Evinrude 4 [ ] Yamaha 5 [ ] Other

5. Engine horsepower (total if twin power)

   H.P.: _____

6. Engine serial #_____ 7. Propeller size _____

   Engine serial #_____

ABOUT YOUR DECISION TO BUY A GRADY-WHITE BOAT

8. Is your Grady-White boat the first boat you have owned?

   1 [ ] yes 2 [ ] no (If no, please complete the following about your last boat.)

   Builder's name: _____ Length: _____

   Why did you sell this boat? _____

   How long did you own this boat? _____

9. Please rank your two most important uses for your Grady-White. (1 = most important 2 = second most important)

   1 [ ] Weekend Living Aboard
   2 [ ] Socializing/Entertainment
   3 [ ] Water Skiing & Water Sports
   4 [ ] Casual Fishing
   5 [ ] Serious Offshore Fishing
   6 [ ] Extended Cruising/Traveling
   7 [ ] Tournament Fishing
   8 [ ] Casual Cruising
   9 [ ] Skin Diving
   10 [ ] Other (please specify) _____

10. Please rank your three most important reasons for buying your Grady-White boat.
    (1 = most important 2 = second most important 3 = third most important)

    1 [ ] Boat Show
    2 [ ] GW Dealer
    3 [ ] Reasonable price
    4 [ ] Hull Design/Ride
    5 [ ] Cockpit Layout
    6 [ ] Brand of Motor
    7 [ ] Friends Recommendation
    8 [ ] Exterior Styling
    9 [ ] Previous GW Experience
    10 [ ] Quality
    11 [ ] Safety/Seaworthiness
    12 [ ] Low Maintenance
    13 [ ] Resale Value
    14 [ ] Cabin Features
    15 [ ] Other

PLEASE TELL US ABOUT YOURSELF

11. Which of the following magazines do you subscribe to or read often?

20 ☐ ALASKA MAGAZINE	23 ☐ LA SPORTSMAN	19 ☐ SKIN DIVER
1 ☐ BOATING	2 ☐ MOTORBOATING & SAILING	3 ☐ SPORTFISHING
31 ☐ BOATING WORLD	5 ☐ NEW ENGLAND FISHERMAN	22 ☐ TEXAS FISH & GAME
7 ☐ CHESAPEAKE BAY	8 ☐ NEW JERSEY FISHERMAN	6 ☐ TRAILER BOATS
10 ☐ DUCKS UNLIMITED	11 ☐ OFFSHORE	9 ☐ TIDE
13 ☐ FLORIDA SPORTSMAN	27 ☐ POWER & MOTORYACHT	12 ☐ WALL STREET JOURNAL
24 ☐ GREAT LAKES FISHERMAN	28 ☐ SALT WATER FLY FISHING	29 ☐ WESTERN OUTDOOR NEWS
16 ☐ LAKELAND BOATING	14 ☐ SALTWATER SPORTSMAN	30 ☐ YACHTING
18 ☐ LONG ISLAND FISHERMAN	17 ☐ SEA MAGAZINE	15 ☐ OTHER

12. What is your age?

1 ☐ Under 25 2 ☐ 25 - 34 3 ☐ 35 - 44 4 ☐ 45 - 54 5 ☐ 55 - 64 6 ☐ 65 +

13. Are you...? 1 ☐ Married 2 ☐ Single 3 ☐ Widowed

14. You are...? 1 ☐ Male 2 ☐ Female

15. Do you have any children living at home? 1 ☐ Yes 2 ☐ No If yes, how many?

What is the age of your oldest child? 1 ☐ 0-5 2 ☐ 6 -10 3 ☐ 11 - 15 4 ☐ 15 +

16. Which of the following best describes your educational background?

1 ☐ Some High School
2 ☐ High School Graduate
3 ☐ Some College or Technical School
4 ☐ College Graduate
5 ☐ Some Post - Graduate Work
6 ☐ Post - Graduate Degree or More

17. What is your total annual household income?

1 ☐ Under $ 30,000
2 ☐ $ 30,001 - $ 40,000
3 ☐ $ 40,001 - $ 50,000
4 ☐ $ 50,001 - $ 60,000
5 ☐ $ 60,001 - $ 70,000
6 ☐ $ 70,001 - $ 85,000
7 ☐ $ 85,001 - $ 100,000
8 ☐ $ 100,001 - $ 150,000
9 ☐ Over $ 150,000

18. Does your family own a second home, where you most often do your boating? 1 ☐ yes 2 ☐ no

If yes, where is your second home? _____, _____
City State

19. Compared to other boaters, would you say you use your boat...

1 ☐ Much more often 2 ☐ More often 3 ☐ About the same amount of time 4 ☐ Less often 5 ☐ Much less often

Thank you for completing this questionnaire. When we receive this information, you will automatically begin receiving the Grady-White Anchor Line newsletter.

Please return to:

GRADY-WHITE BOATS, INC.
CUSTOMER RELATIONS DEPT
PO BOX 1527
GREENVILLE, NC 27835-1527

CHAPTER SIX
247 ADVANCE

TABLE OF CONTENTS

SPECIFICATIONS/OPTIONAL FEATURES **6-2**

OPERATION OF STANDARD FEATURES

Instrumentation And Switches

Instrument Panel 6-3

Switch Panel 6-4

Auxiliary Fuse Panel **6-5**

Main Circuit Breaker **6-5**

Accessory Outlet - 12 Volt **6-6**

Light Bulb Replacement Guide **6-6**

Accessory Wiring Color Code And Fuse/Breaker Size **6-7**

Typical Outboard Switch Panel Wiring **6-8**

Rigging Compartment **6-9**

Transducer Flats **6-9**

Bilge Pump/Float Switch **6-9**

Bilge Pump Location 6-9

Trim Tabs **6-10**

Trim Tab Pump Location 6-11

OPERATION OF OPTIONAL FEATURES

Compass **6-11**

Cockpit Shower **6-11**

Washdown Operation **6-11**

Seacocks **6-11**

Outriggers **6-12**

Advantages 6-12

Instructions 6-12

Care and Maintenance 6-12

Battery Select Switch **6-13**

Head Operating Instructions

Portable Head Operation 6-14

Portable Head With Deck Pump-Out 6-14

Portable Head With In-Line Macerator 6-14

DIAGRAMS

Access Plate and Rigging Tube Location **6-16**

Accessory Wiring **6-17**

Fresh Water System **6-18**

Labels and Location **6-19**

Livewell Layout **6-20**

Livewell/Washdown System **6-21**

Thru Hull Detail **6-22**

247 ADVANCE

SPECIFICATIONS

BEAM-AMIDSHIP	8' 6"
BRIDGE CLEARANCE	7'
BRIDGE CLEARANCE W/HARDTOP	8' 5"
KEEL TO TOP OF WINDSHIELD BAR	8'
CENTERLINE LENGTH	24' 9"
FRESH WATER CAPACITY	20 GALLONS
FUEL CAPACITY - MAIN	151 GALLONS
HULL DRAFT	1' 3"
MAXIMUM HP	350 HP
ENGINE SHAFT LENGTH	SINGLE 30" DUAL 25"
TRANSOM WIDTH	7' 10"
DRY WEIGHT	3500 LBS
STEERING TYPE	HYDRAULIC
CONTROL CABLE LENGTH	PORT - 22' STBD – 20'

OPTIONAL FEATURE LIST

ACCESSORIES

- Boat Lifting Ring
- Bow Pulpit
- Cockpit Bolsters
- Cockpit Shower W/20 Gallon Fresh Water Tank
- Electronics Flush Mount Kit
- Head - Portable
- Head - Portable W/Deck Pump-Out
- Head - Portable W/In Line Macerator
- Livewell - 23 Gallon Raw Water W/Cushion Seat
- Outrigger Kit 15 Ft. (Radial Top Gun T-Top Mount)
- Seating - Deluxe Helm & Companion Chairs
- Seating - Deluxe Lean Bar W/Backrest, Rod Holders & Storage
- Seating - Forward Platform Cushions
- Steering - Tilt
- Stereo/CD System
- T-Top W/Rod Holders, Radio Box, & Spreader Lights
- Washdown - Pressurized Sea Water W/Hose

CANVAS

- T-top Front & Side Curtains

OPERATION OF STANDARD FEATURES

INSTRUMENTATION AND SWITCHES

Grady White installs full instrumentation on pre-rig boats. The instruments are electrically connected to the ignition key. To operate instruments the ignition switch should be in the "on" position. See Instruments in *Sportfish, Cruisers, Yachts Owner's Manual.*

INSTRUMENT PANEL

Not all boats are equipped with the same type of instrumentation. Consult your dealer for specifics on the type of instrumentation included on your boat.

ENGINE WATER TEMPERATURE GAUGE

The water temperature gauge indicates the temperature of the cooling water circulating through your engine. If temperatures exceed the recommended operating range - shut off your engine immediately to prevent damage. Overheating is caused by obstruction of your engine's water intake on the lower unit. Check the water intake strainer first if you experience trouble.

FUEL GAUGE

The fuel gauge indicates the fuel level. When reading this gauge remember...

- the accuracy varies with the attitude of your boat in the water (trim or list).
- the fuel pickup tube is not capable of withdrawing all of the fuel from the tank. For these reasons never operate your boat at very low fuel levels.

OIL LEVEL GAUGE

This gauge indicates the quantity of oil in the oil tank.

TACHOMETER GAUGE

The tachometer indicates engine revolutions per minute (RPMs). Consult engine owner's manual for the recommended operating RPM range.

TRIM GAUGE

The trim gauge indicates the angle of thrust of the lower unit of the engine(s). See TRIM, Chapter 3, for adjustment advice.

VOLTMETER

The voltmeter indicates the battery charge. A reading of 12 or 13 volts is normal denoting a fully charged battery. Readings below 11 imply a weak battery and may not start the engine(s). A reading of 13-15v while an engine is running is normal. Readings over 15v may indicate regulator problems. Low or fluctuating readings may imply loose connections or trouble in the regulator and alternator circuit. A voltage drop soon after the engine is shut down indicates a bad battery or a heavy load on the electrical system.

WATER PRESSURE GAUGE

The water pressure gauge indicates the water pressure in the engine cooling system. Readings help determine if water pressure is too low for adequate cooling. Consult engine owner's manual for a recommended operating range.

WATER TEMPERATURE, OIL LEVEL AND RESTRICTION WARNING SYSTEMS

Outboard engines have several warning systems. The buzzer for this system is located under the dash. Some models also have indicator lights in addition to the audible alarm. Consult your manual for location and functions.

SWITCH PANEL

At the helm station you will find an accessory switch panel. Not all boats are equipped with the same accessories. See your dealer for information or questions regarding the accessories included on your boat.

BILGE PUMP

This two-way switch serves as an overriding manual switch in the event of failure of the automatic switch in the bilge.

COCKPIT LIGHTS

The cockpit lights provide illumination in the cockpit area.

FUEL

Boats with dual tanks have a two-position switch (MAIN-AUX) which allows separate fuel quantity readings from each tank. This switch only operates the fuel level gauge, and **does not select the tank**. Reference FUEL SELECT VALVE in Chapter 2 for directions on selecting.

HORN

The horn meets the requirements of the USCG sounding device.

LIVEWELL

This switch activates the livewell system.

NAVIGATIONAL/ANCHOR LIGHTS

The three-position switch (NAV-OFF-ANC) changes the lighting configuration.

TRIM/TILT

The trim/tilt switch is located on the throttle control. Trim changes the angle of thrust of the engine (reference Trim in Chapter 3). Tilt raises the engine for trailering.

WASHDOWN

This switch activates the washdown system.

WATER PRESSURE

This switch activates the pressurized fresh water system.

ACCESSORY

Switches and breakers labeled "ACC" are blank. Both are used for non-factory installed accessories. See ACCESSORY WIRING COLOR CODE AND FUSE/BREAKER SIZE CHART, page 6-7, for recommended breaker amperages. Switch labels are available from your dealer for non-factory installed options.

NOTICE
Use an anti-corrosion spray on the back of panels and exposed wires to prevent the rust or corrosion that could lead to an electrical system failure.

AUXILIARY FUSE PANEL

The auxiliary fuse panel located under the dash offers the ability to install electronics in addition to the accessory switches located in the dash. Your model utilizes the automotive type fuse.

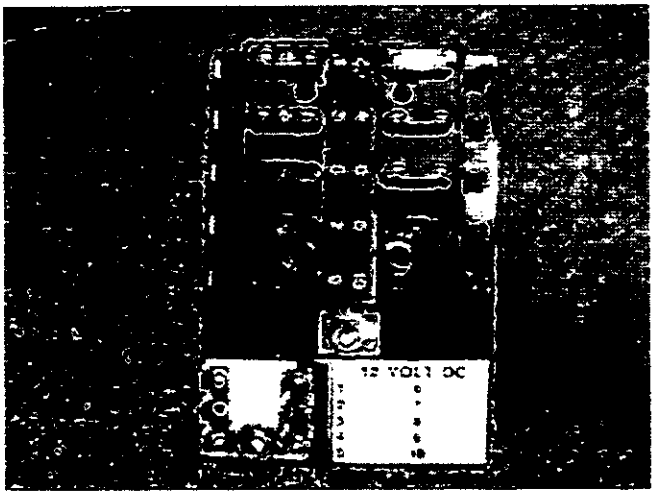

MAIN CIRCUIT BREAKER

There is a 40 AMP circuit breaker located in the rigging compartment under the aft seat lid. This is the main breaker protecting the wiring supplying power to the accessory switch panel. If this breaker is tripped depressing the red button on the breaker box will reset it.

ACCESSORY OUTLET - 12 VOLT

A 12-volt outlet is installed at the helm. This outlet provides an easily accessible power supply for accessories such as cellular phones and spotlights.

NOTICE
This outlet cannot be used with a cigarette lighter.

LIGHT BULB REPLACEMENT GUIDE

The following chart provides identification of replacement light bulbs for your Grady-White. All of the lights shown may not be used on every model boat. If you have difficulty finding replacement bulbs under the part numbers listed contact your Grady-White dealer for further assistance. Always use the specified replacement bulb. Improper substitution my result in electrical malfunction, insufficient lighting, boat damage or personal injury.

The following are Registered Trademarks: Perko, Attwood, Gem, Ramco, Guest, GE, Sylvania and Phillips.

18" REDUCED GLARE HARDTOP MAST LIGHT
LIGHT MANF.: PERKO
REPLACEMENT BULB #: PERKO 71 DP CLR

COCKPIT LIGHT
LIGHT MANF.: ATTWOOD
REPLACEMENT BULB #: ATTWOOD #90

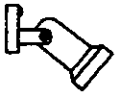

READING LIGHT FOR CABIN
LIGHT MANF.: GEM
REPLACEMENT BULB #: GEM 1831 21CP OR
GE/SYLVANIA #1142

COMBINATION BOWLIGHT
LIGHT MANF.: PERKO
REPLACEMENT BULB #: PERKO 71 DP CLR

SEPARATE SIDE BOWLIGHTS
LIGHT MANF.: PERKO
REPLACEMENT BULB #: PERKO 71 DP CLR

TOP MOUNT LIGHT (CONSOLE GRABRAIL)
LIGHT MANF.: PERKO
REPLACEMENT BULB #: PERKO 338 DP1 CLR

INTERIOR CABIN LIGHT
LIGHT MANF.: RAMCO
REPLACEMENT BULB #: RAMCO 296 OR
GE OR SYLVANIA OR PHILLIPS G4

STERN POLE LIGHT
LIGHT MANF.: PERKO
REPLACEMENT BULB #: PERKO 337 012 DP

TOP MOUNT LIGHT (WINDSHIELD)
LIGHT MANF.: PERKO
REPLACEMENT BULB #: PERKO 338 DP2 CLR
"REDUCE GLARE"

DOME LIGHT
LIGHT MANF.: PERKO
REPLACEMENT BULB #: PERKO 337-013 DP

NIGHT VISION DOME LIGHT
LIGHT MANF.: GUEST
REPLACEMENT BULB #: GUEST P-13650 OR GE 912

247 ADVANCE

ALL PARTS BELOW ARE NOT AVAIBLE ON EACH MODEL
ACCESSORY WIRING COLOR CODE AND FUSE/BREAKER SIZE CHART

ACCESSORY	WIRE SIZE AND COLOR	AMPERAGE	LOCATION
LIGHTS			
BOW LIGHT	16 GA. GRAY	15.0	ACCESSORY PANEL
AFT POLE LIGHT	16 GA GRAY/WHITE	15.0	ACCESSORY PANEL
MAST LIGHT	16 GA GRAY/RED	15.0	ACCESSORY PANEL
PANEL LIGHTS	16 GA DARK BLUE	15.0	ACCESSORY PANEL
CABIN LIGHTS	16 GA DARK BLUE/GREEN	10.0	FUSE BLOCK
COCKPIT LIGHTS	16 GA DARK BLUE	10.0	ACCESSORY PANEL
SPREADER LIGHTS	14 GA DARK BLUE/WHITE	10.0	ACCESSORY PANEL
PUMPS			
BILGE PUMP (FORWARD):			
RULE 1100	16 GA BROWN/BLACK	5.0	ACCESSORY PANEL
RULE 1500	16 GA BROWN/BLACK	7.5	ACCESSORY PANEL
AUTO FLOAT SWITCH (FORWARD)	16 GA BROWN/RED	5.0	NEAR BATTERY
BILGE PUMP (AFT):			
RULE 1100	16 GA BROWN	5.0	ACCESSORY PANEL
RULE 1500	16 GA BROWN	7.5	ACCESSORY PANEL
AUTO FLOAT SWITCH (AFT)	16 GA BROWN/WHITE	5.0	NEAR BATTERY
AERATOR PUMP (CIRCULATING)	16 GA ORANGE/2BROWN	3.0	ACCESSORY PANEL
AERATOR PUMP (BUBBLER)	16 GA ORANGE/2BROWN	2.0	ACCESSORY PANEL
SHOWER SUMP PUMP (FLOAT SWITCH)	16 GA BROWN/ORANGE	4.0	FUSE BLOCK
WATER PRESSURE PUMP (CABIN SHOWER)	12 GA ORANGE/BLUE	15.0	ACCESSORY PANEL
WATER PRESSURE PUMP	16 GA ORANGE/BLUE	5.0	ACCESSORY PANEL
WASHDOWN PUMP	12 GA ORANGE/BROWN	15.0	ACCESSORY PANEL
LIVEWELL PUMP	16 GA ORANGE/BROWN	5.0	ACCESSORY PANEL
IN-LINE MACERATOR PUMP	12 GA ORANGE/GRAY	20.0	ACCESSORY PANEL
PRIMER PUMPS (PORT)	16 GA PINK/RED	5.0	ACCESSORY PANEL
(STARBOARD)	16 GA PINK/BLUE	5.0	ACCESSORY PANEL
MISCELLANEOUS			
HORN	12 GA ORANGE/WHITE	15.0	ACCESSORY PANEL
WINDSHIELD WIPER (ACTUATOR):			
PORT	16 GA ORANGE/GREEN	5.0	ACCESSORY PANEL
STARBOARD	16 GA ORANGE/BLACK	5.0	ACCESSORY PANEL
WINDSHIELD WIPER (POSITION)	16 GA ORANGE		
ACCESSORY	16 GA ORANGE	10.0	ACCESSORY PANEL
ACCESSORY GROUNDS (IND.)	16 GA BLACK	N/A	
ACCESSORY GROUNDS MAINS	10 GA BLACK	N/A	
HYDRAULIC TRIM TABS	16 GA HARNESS (SUPPLIED)	20.0	FUSE BLOCK
MAIN FUEL TANK (SENDER)	16 GA PINK	N/A	ACCESSORY PANEL
AUXILIARY FUEL TANK (SENDER)	16 GA PINK/WHITE	N/A	ACCESSORY PANEL
ACCESSORY PANEL POWER LEAD	6 OR 10 GA RED CIRCUIT BR	40.0	NEAR BATTERY
VHF (HARDTOP RADIO BOX) POWER LEAD	10 GA RED/WHITE	20.0	NEAR BATTERY
VHF GROUND	10 GA BLACK/WHITE	N/A	
12 VOLT ACCESSSORY OUTLET	12 GA RED/ORG	15.0	FUSE BLOCK
MEMORY WIRE	16 GA RED/PINK	10.0	NEAR BATTERY
OIL SENDER (STBD)	16 GA LT. BLUE	N/A	
OIL SENDER (PORT)	16 GA LT. BLUE/WHITE	N/A	
FUEL GROUNDS	16 GA GREEN	N/A	

TYPICAL OUTBOARD SWITCH PANEL WIRING

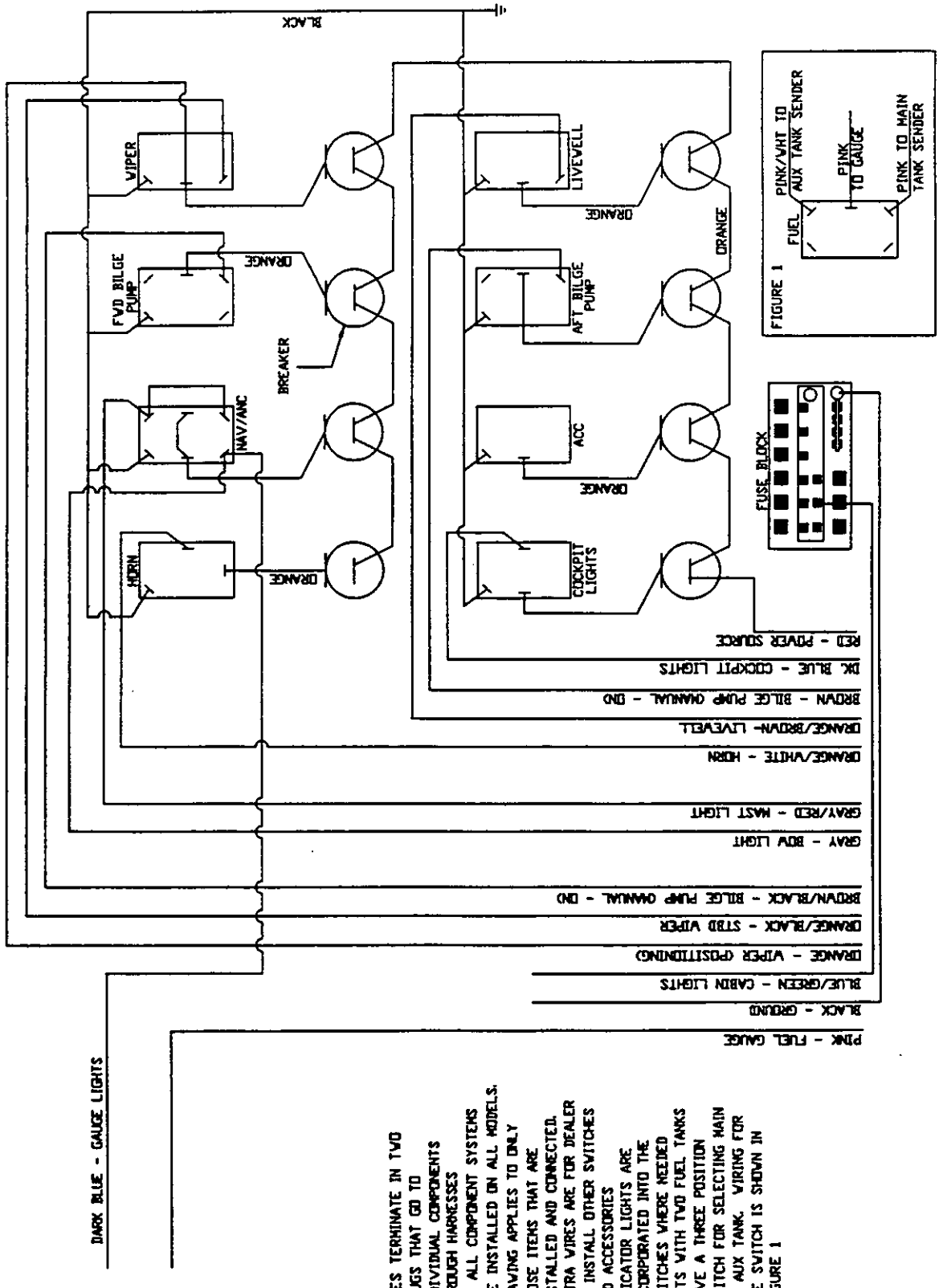

NOTE:
1. WIRES TERMINATE IN TWO PLUGS THAT GO TO INDIVIDUAL COMPONENTS THROUGH HARNESSES
2. NOT ALL COMPONENT SYSTEMS ARE INSTALLED ON ALL MODELS. DRAWING APPLIES TO ONLY THOSE ITEMS THAT ARE INSTALLED AND CONNECTED. EXTRA WIRES ARE FOR DEALER TO INSTALL OTHER SWITCHES AND ACCESSORIES
3. INDICATOR LIGHTS ARE INCORPORATED INTO THE SWITCHES WHERE NEEDED
4. BOATS WITH TWO FUEL TANKS HAVE A THREE POSITION SWITCH FOR SELECTING MAIN OR AUX TANK. WIRING FOR THE SWITCH IS SHOWN IN FIGURE 1

RIGGING COMPARTMENT

The rigging compartment is located aft of the fuel tank compartments. This enclosure is functional for rigging ignition protected accessories and for better passage to rigging components located aft of this compartment. This compartment contains two flats for mounting transducers.

NOTICE
The rigging hatch and mounting screws must be sealed with silicone sealer after rigging is complete. If the lid is removed it must be resealed to insure watertight integrity.

TRANSDUCER FLATS

The inverted transducer flats are designed primarily for a bronze style torpedo-shaped transducer. An example of a torpedo shaped unit would be an Aero Mar Tri-Transducer. This transducer is approximately ¾" thick. This thickness allows the transducer face to protrude below the bottom of the hull. An additional ½" spacer may be installed between the hull bottom and the transducer for optimum results. The transducer should be installed as far forward on the flat as possible, and parallel with the keel.

NOTICE
A flush mount style transducer will not work with the inverted flat.

BILGE PUMP & FLOAT SWITCH

Your boat is equipped with automatic float switches adjacent to the bilge pumps. A float switch will enable the bilge pump to come on automatically if a significant amount of water accumulates in the bilge. These switches are wired directly to the batteries. They function independently of the battery select switch(es) and can activate the bilge pump with the battery select switches in the "off" position. Batteries should be inspected frequently to ensure proper operation. The bilge pumps are also equipped with switches at the helm. When a switch is in the MANUAL position the pump will run continuously. When a switch is in the stand by position, the pump is off unless activated by the float switch.

! CAUTION
Do not run the bilge pump dry for a prolonged period of time.

BILGE PUMP LOCATION

The bilge pump is located in the aft bilge under the access plate just forward of the transom.

TRIM TABS

Trim tabs are electrically and hydraulically operated and are used to regulate the attitude of the boat while moving. They may also be used to adjust the boat's running angle in adverse seas or to compensate for unusual load conditions.

TRIM TAB

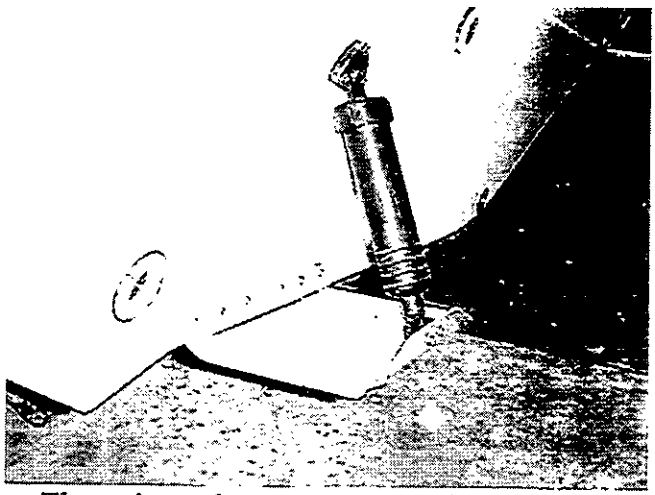

TRIM TAB SWITCH

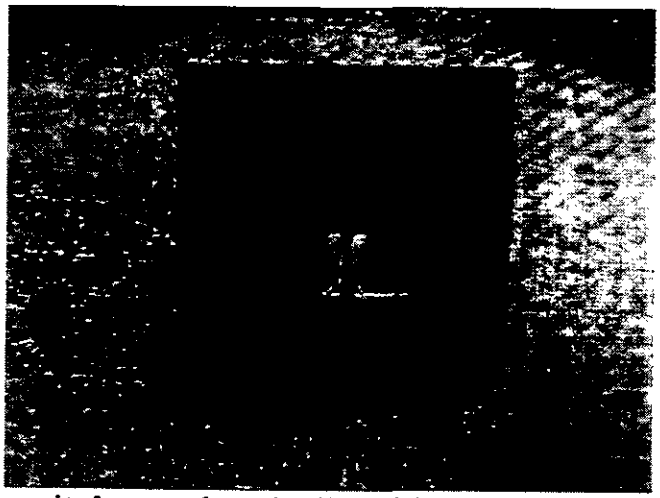

The trim tabs are operated by a two-rocker switch panel and will aid in trimming the boat fore and aft for a smoother ride. The switches are marked "bow down". Trim tabs in the extreme "bow up" positions will have no effect on the boat's ride.

Trim tabs can improve the ride of your boat by adjusting where the water is hitting the keel line. In a slight chop the waves may be hitting the keel of your boat around the helm area causing an uncomfortable ride. By adjusting the trim tabs and lowering the bow the waves will hit the keel at a more forward point softening the ride. Experiment with trim tabs in various sea conditions to decide the best positions for your boat under different circumstances.

Trim tabs are also useful in correcting a port or starboard running list. If the boat is listing to the port side press the starboard trim tab switch toward "bow down". Press the port trim tab switch toward "bow down" to correct a starboard list. This will tend to lower the bow by pulling the higher side to a level position. If your bow is already in a low position you may correct a listing condition by pressing the trim tab switch toward "bow up". This will raise the low side and level the boat, improving the running angle.

Trim tabs in the extreme "bow down" position will cause the boat to come on plane with minimum bow rise. Unless you are operating at low speeds or with considerable cockpit weight you will likely want to raise the tabs slightly when underway in order to avoid "plowing" water. With the tabs in the "bow down" position you will be able to maintain a plane at the least possible RPMs.

Most drive units are equipped with an adjustable rudder trim tab. This trim tab should be adjusted to balance the steering at the speed that you travel most frequently. Variations in speed, boat load or changes in the drive unit trim will cause the steering to pull in one direction. If the boat pulls to the left adjust the trim tab to the left and vice-versa.

TRIM TAB PUMP LOCATION

The pump is located in the forward rigging compartment under the console.

OPERATION OF OPTIONAL FEATURES

COMPASS

The compass is located at the helm station in direct view of the operator when navigating the boat. Following the instructions in the compass manual included in the "Owners Packet" will help make compensation adjustments to the compass.

COCKPIT SHOWER

To operate the cockpit shower the water pressure switch located on the accessory panel must be in the "on" position. Open the flap and pull the shower wand from the recessed deck fitting. Depress the button on the back of the wand to spray water. To reinstall the shower wand gently feed the hose down through the deck and replace the flap on the fitting.

WASHDOWN OPERATION

To operate the washdown open the seacock located on starboard side under the aft seat lid. Depress the washdown switch on the accessory switch panel at the helm. The washdown system will now be pressurized at the washdown faucet outlet. This faucet may be used alone or with a washdown hose. A washdown hose with a spray nozzle attached may be used intermittently without turning the switch "off". This operation is basically the same as a home yard hose with a nozzle. The washdown pump has an internal pressurization switch that will maintain water pressure as needed until the switch is turned "off" at the switch panel.

SEACOCKS

Ball valve seacocks are installed on the inlet thru hulls for the livewell and washdown systems and on the discharge thru hull for some head systems. It is necessary for the seacocks to be in the open position to operate the livewell and washdown systems. The open position is identified by the orientation of the handle. If the handle is in line or parallel to the body of the valve, the seacock is in the open position. If the handle is perpendicular to the body of the valve, the seacock is in the closed position.

NOTICE
All seacocks should be in the closed position if not in use or if the boat is unattended to prevent the taking on of water if a plumbing component fails.

NOTICE
If the seacock is left open and the pump is not "ON", the boat's forward motion through the water will gradually fill the box. To prevent this inadvertent filling close the seacock when the livewell option is not in use.

NOTICE
Under certain conditions placing the outboard engine(s) in reverse will ventilate the water under the boat and create an airlock in the livewell pump. To prevent this situation turn the livewell "OFF" prior to any high RPM or constant reverse operation. If the livewell pump becomes airlocked, correct this situation by turning the pump "OFF" for 20 seconds.

OUTRIGGERS

Outriggers allow you to spread the lines trolled from your boat and decrease the chance of entanglement.

ADVANTAGES

Advantages of outriggers include: offering bait throughout a larger area behind the boat, placing bait out of the wake zone, automatic drop back following strikes (which allows for fish to completely accept bait) and a reduction in unnecessary twisting action characteristic of artificial bait.

INSTRUCTIONS

Guidelines for proper installation and use are provided in your Owner's Packet.

CARE AND MAINTENANCE

Outriggers should be washed with fresh water, a mild soap and a soft cloth. The outrigger poles should be sprayed down with fresh water. Never use acidic or abrasive cleaners on outriggers.

A periodic waxing of your outriggers is suggested if your boat is frequently exposed to salt water. The wax will provide a protective coating and seal the pores of the metal. A non-abrasive high quality marine or automotive wax is recommended. Before storage clean and wax the outriggers.

During assembly grease all threads, bolts and tubes where one section is inserted into another. Once a year disassemble and regrease all applicable surfaces.

A periodic check for stretched or worn spreader wires on the outrigger poles is advised. If wires are stretched they should be re-tensioned to provide even support.

BATTERY SELECT SWITCH

Boats that are equipped with two batteries use a select switch to indicate which battery will be used. The switch is labeled Battery 1, Battery 2, BOTH and OFF. Alternate select switch between battery #1 and battery #2.

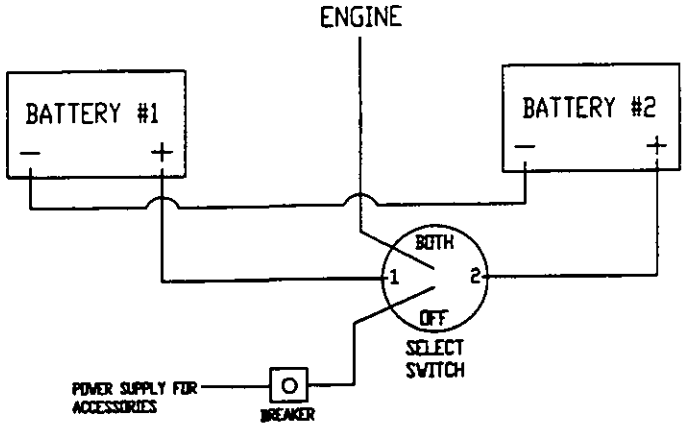

On twin engine boats with two select switches, a switch should be connected to each engine. Either battery may start either engine by selecting position #1 or position #2 on the switches. In normal use select position #1 on one switch and position #2 on the other so that both batteries will be charged simultaneously.

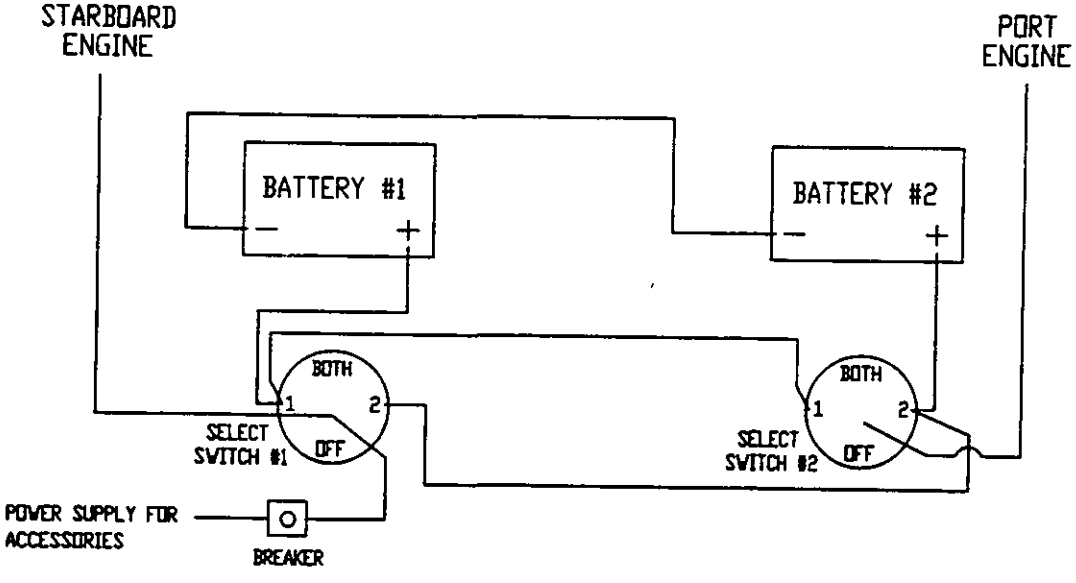

In an emergency situation when neither battery will start the engine(s) the select switches allow you to combine the power of both batteries by selecting BOTH. The switches should be returned to either the #1 or #2 position after the engines are started to allow each battery to be charged.

⚠ WARNING

Never turn the battery select switch to the "OFF" position with the engine(s) running or the charging system could be damaged.

HEAD OPERATING INSTRUCTIONS

PORTABLE HEADS

PORTABLE HEAD OPERATION

1. The upper fresh water reservoir must be filled with water prior to use.
2. Compress the bellows pump located on the left corner of the toilet a few times to add water to the bowl.
3. **Flush** the toilet by pulling the slide valve handle out (located on the front of the toilet).
4. Compress the bellows pump until the bowl is rinsed.
5. Close the slide valve handle by pushing it in fully.

PORTABLE HEAD WITH DECK PUMP-OUT

For flushing instructions follow the steps outlined under PORTABLE HEAD OPERATION.

To empty the portable head reservoir by use of a deck pump-out follow the instructions below.

1. Remove the cap from the deck pump-out fitting located in the starboard gunwale.
2. Connect a vacuum hose from a pump-out station to the deck fitting and run until the reservoir is empty. Replace the cap on the deck pump-out fitting.

PORTABLE HEAD WITH IN-LINE MACERATOR

For flushing instructions follow the steps outlined under PORTABLE HEAD OPERATION.

There are two ways to empty the portable head reservoir with this type of set-up. The waste may be vacuumed out through the deck fitting or discharged through a seacock in the hull bottom.

Vacuum through dech fitting follow the instructions below.

1. Locate the Y-valve mounted on the aft wall inside the console. Place the Y-valve handle in the deck pump-out position (handle pointed up).
2. Follow the steps outlined under PORTABLE HEAD WITH DECK PUMP-OUT.

To discharge through macerator and seacock follow these instructions.

1. Locate the Y-valve mounted on the aft wall inside the console. Place the Y-valve handle in the overboard discharge position (handle pointed down).
2. Open the head discharge seacock (handle in the vertical position). This seacock is located on the aft wall inside the console
3. Turn "ON" the head pump switch at the helm and discharge until the reservoir is empty. Close the discharge seacock (handle in the horizontal position).

⚠ CAUTION
Overboard discharge seacock must be sealed and secured in the closed position in accordance with the laws in your boating area.

247 ADVANCE

ACCESS PLATE AND RIGGING TUBE LOCATION

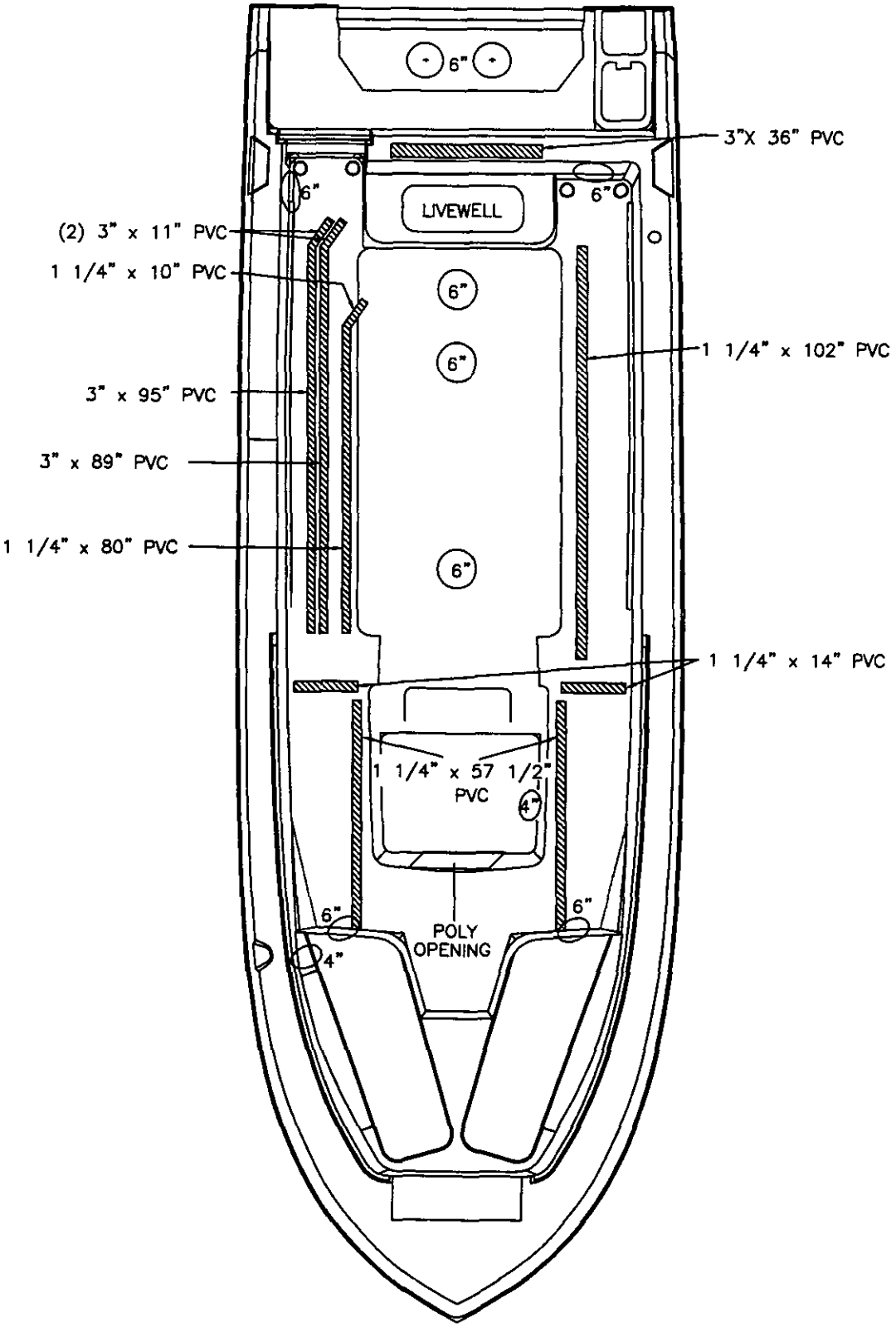

247 ADVANCE

ACCESSORY WIRING

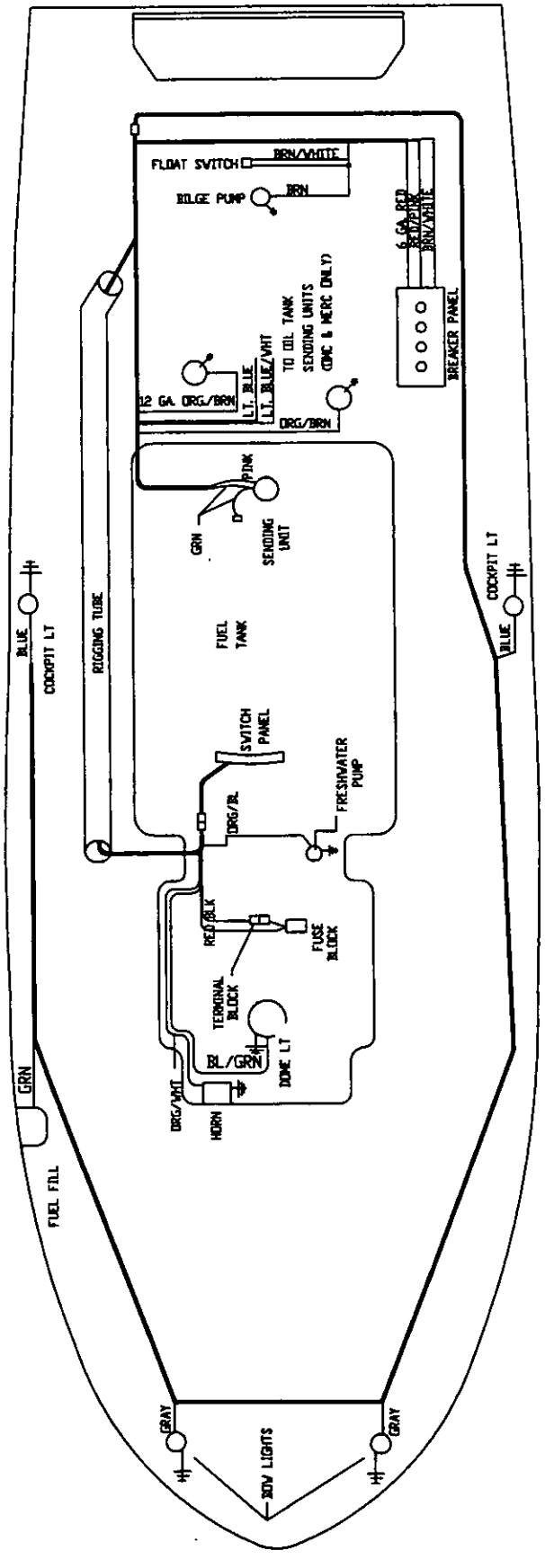

FRESH WATER SYSTEM

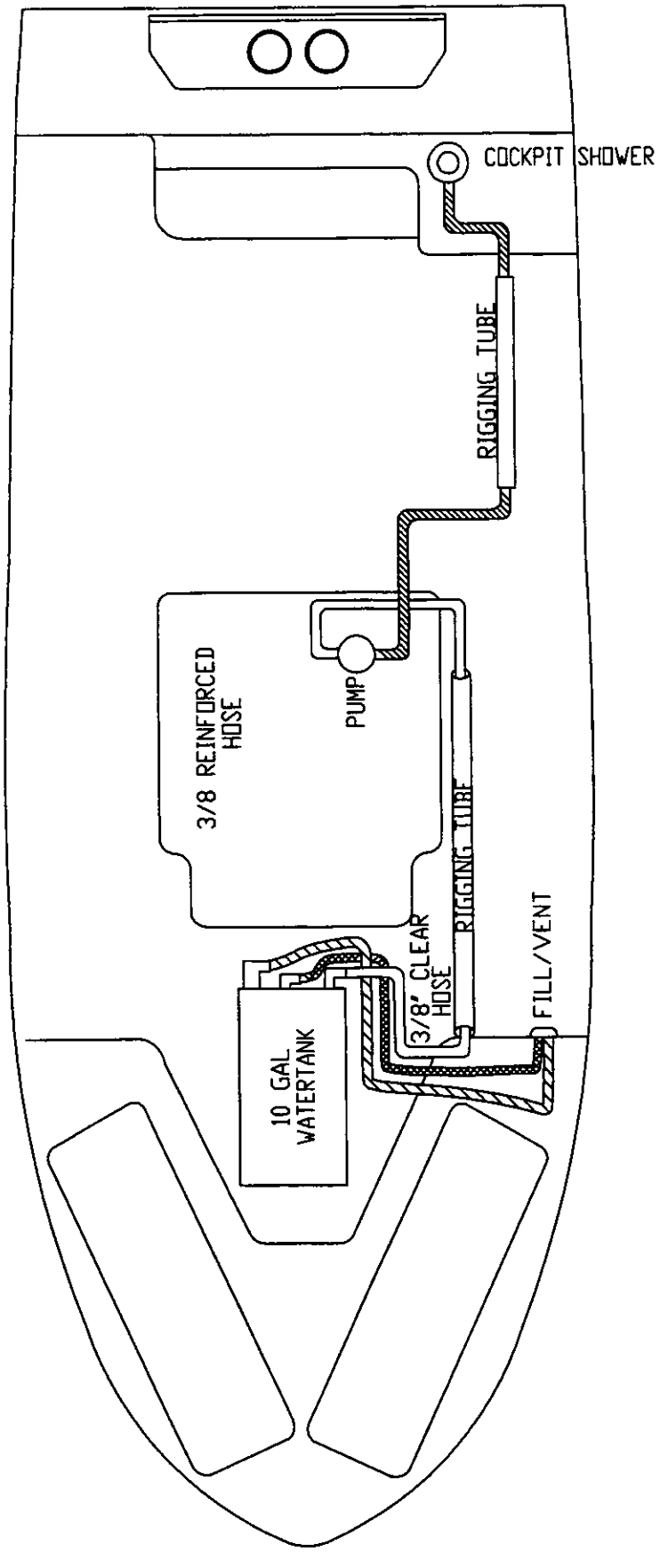

247 ADVANCE

LABELS AND LOCATION

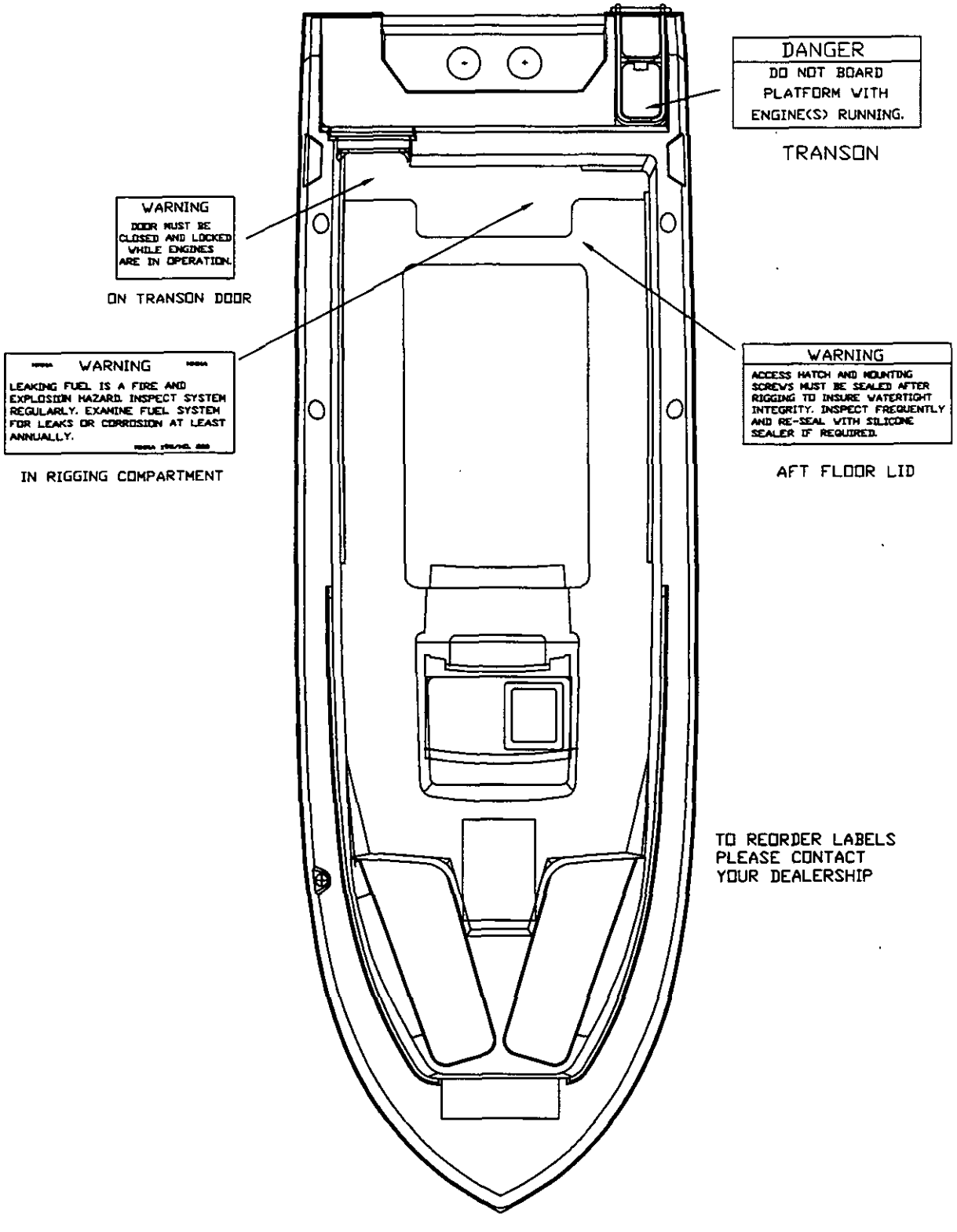

247 ADVANCE

LIVEWELL LAYOUT

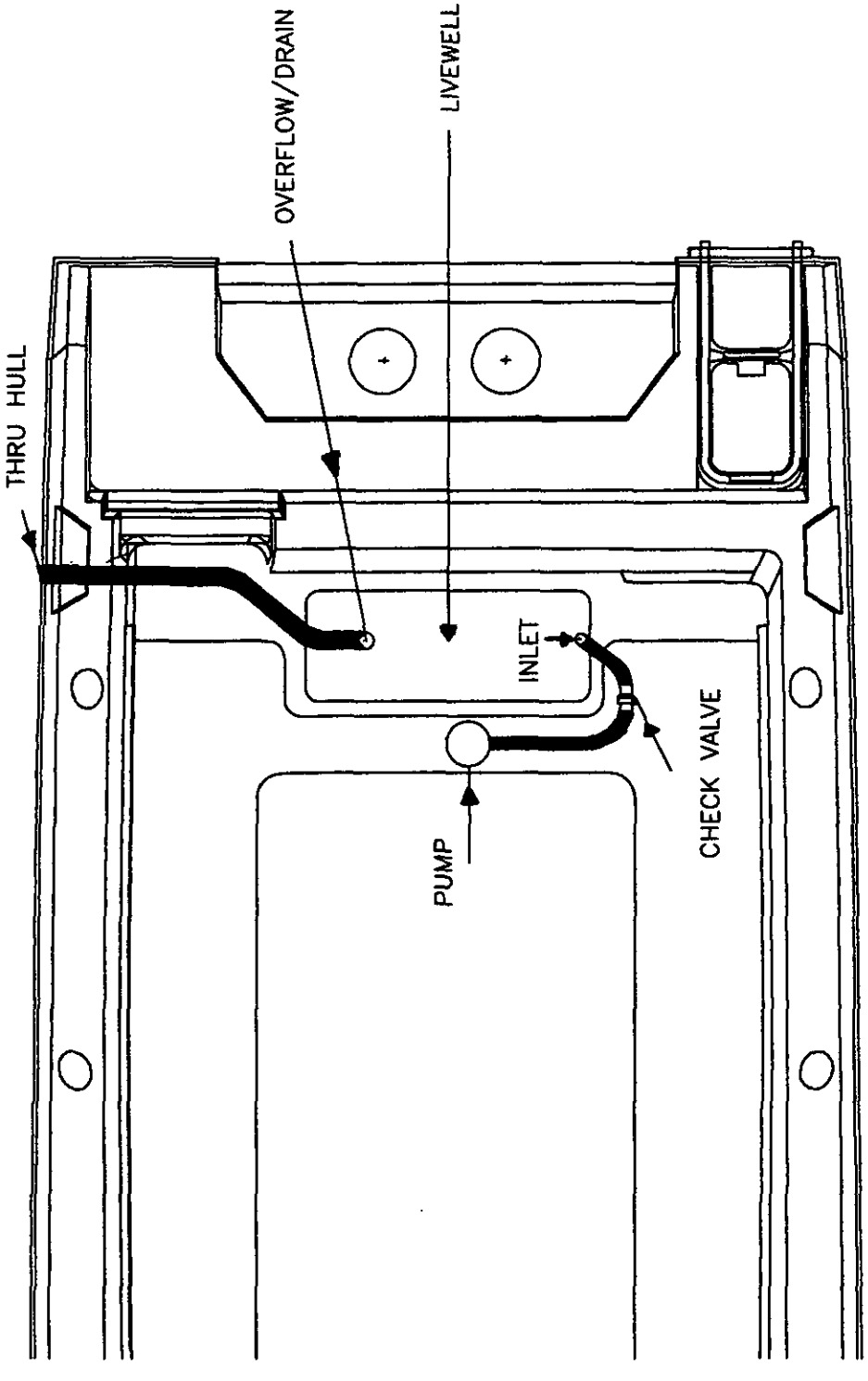

247 ADVANCE

LIVEWELL/WASHDOWN SYSTEM

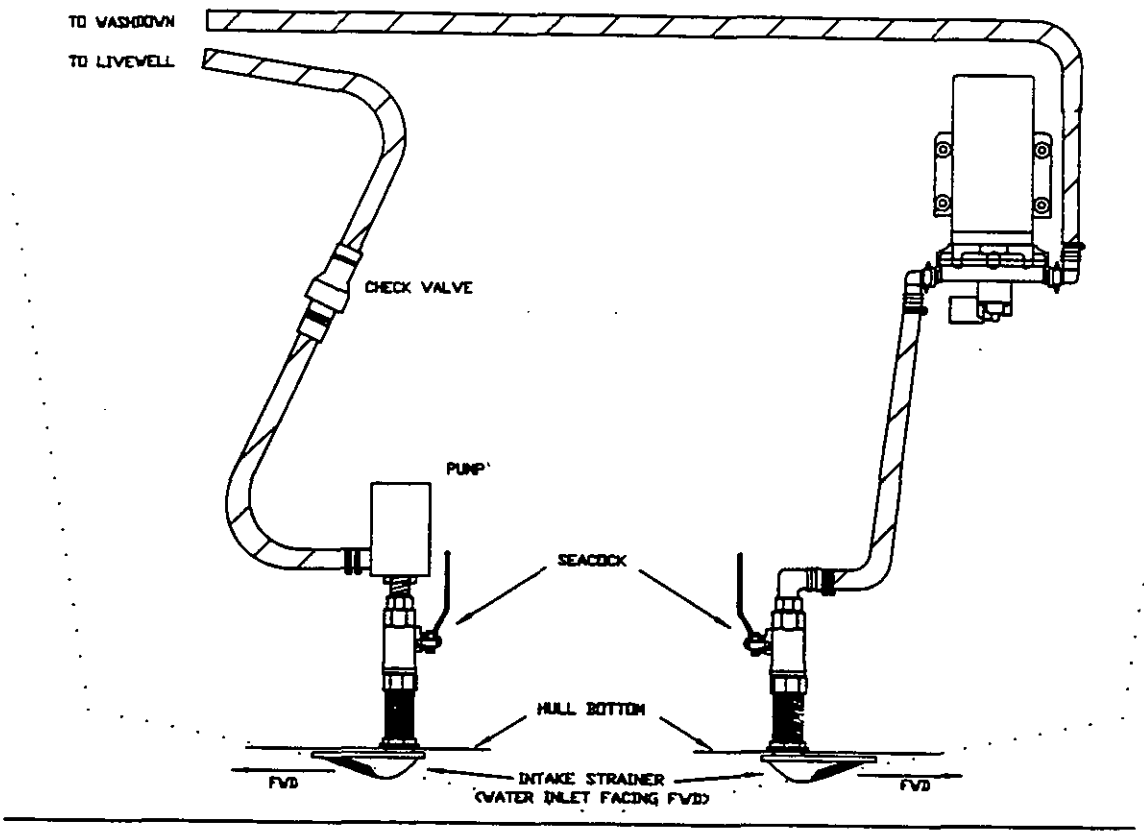

247 ADVANCE

THRU HULL DETAIL

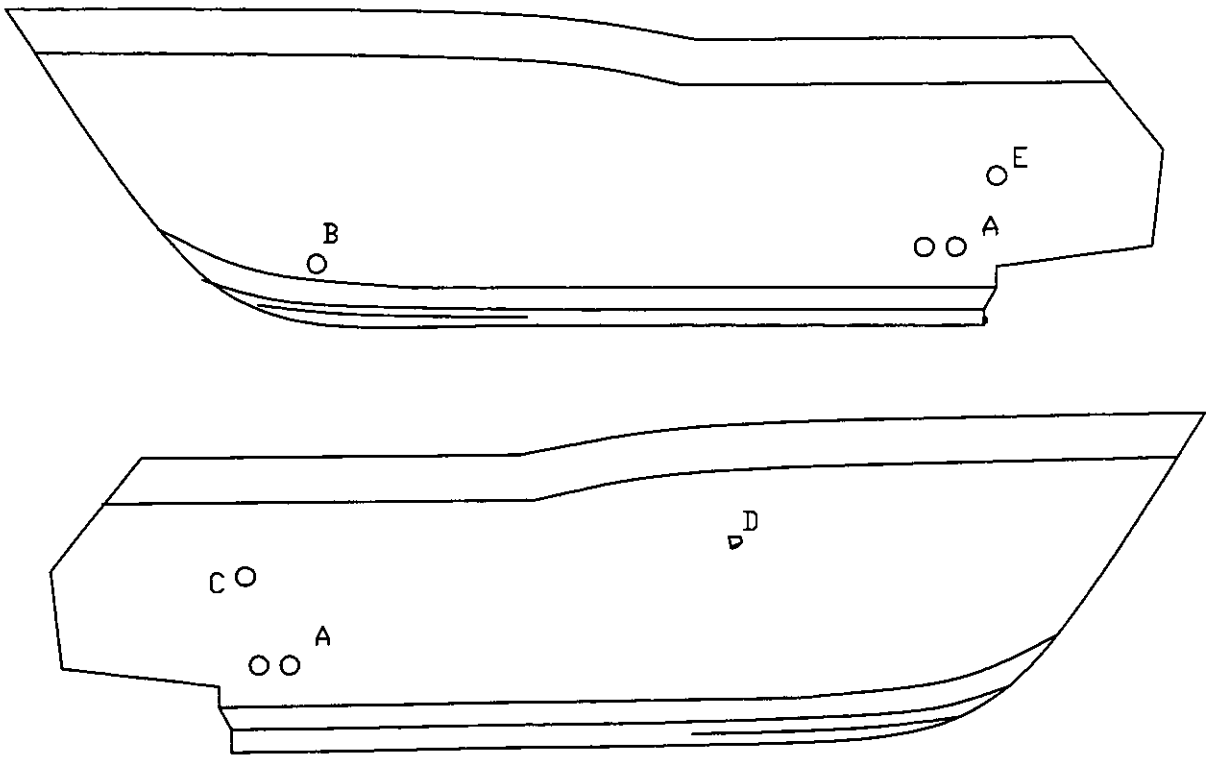

T-HULL DESCRIPTION

A SCUPPERS
B FWD BOXES
C CLW OPTION
D HM VENT
E AFT BILGE